ELECTRA-flo 5 SERIES

Thermal Airflow Measurement System
Installation and Operating Manual

Air Monitor
Precision Airflow Measurement
An ONICON Brand

DOC-0003314 Rev.E

SAFETY INFORMATION

Regarding this Manual:

- This manual should be passed on to the end user.
- Before use, read this manual thoroughly to comprehend its contents.
- The contents of this manual may be changed without prior notice.
- All rights reserved. No part of this manual may be reproduced in any form without Air Monitor's written permission.
- Air Monitor makes no warranty of any kind with regard to this material, including, but not limited to, implied warranties of merchantability and suitability for a particular purpose.
- All reasonable effort has been made to ensure the accuracy of the contents of this manual. However, if any errors are found, please inform Air Monitor.
- Air Monitor assumes no responsibilities for this product except as stated in the warranty. If the customer or any third party is harmed by the use of this product, Air Monitor assumes no responsibility for any such harm owing to any defects in the product which were not predictable, or for any indirect damages.

SAFETY PRECAUTIONS:

The following general safety precautions must be observed during all phases of installation, operation, service, and repair of this product. Failure to comply with these precautions or with specific WARNINGS given elsewhere in this manual violates safety standards of design, manufacture, and intended use of the product. Air Monitor Corporation assumes no liability for the customer's failure to comply with these requirements. If this product is used in a manner not specified in this manual, the protection provided by this product may be impaired.

The following messages are used in this manual:

WARNING
Messages identified as "Warning" contain information regarding the personal safety of individuals involved in the installation, operation or service of this product.

CAUTION
Messages identified as "Caution" contain information regarding potential damage to the product or other ancillary products.

IMPORTANT NOTE
Messages identified as "Important Note" contain information critical to the proper operation of the product.

TABLE OF CONTENTS

SECTION 1.0 GENERAL INFORMATION 4
1.1 PURPOSE OF THIS GUIDE 4
1.2 TYPICAL THERMAL AIRFLOW MEASUREMENT SYSTEM INSTALLATION 4
1.3 STANDARD FEATURES AND SPECIFICATIONS 5
1.4 MODEL NUMBER CODIFICATION 7
1.5 CHECKING THAT YOU RECEIVED EVERYTHING 9
1.6 WORKING ENVIRONMENT 9
1.7 SERIAL NUMBER 9

SECTION 2.0 INSTALLATION 10
2.1 SITE SELECTION 10
2.2 TRANSMITTER DIMENSIONS 11
2.3 TRANSMITTER INSTALLATION 12
2.4 TRANSMITTER WIRING CONNECTIONS 12
2.4.1 ELECTRA-FLO G5 POWER/ SIGNAL CONNECTIONS 13
2.4.2 ELECTRA-FLO G5 ANALOG OUTPUTS & SERIAL COMMUNICATION 13

SECTION 3.0 OPERATION 14
3.1 START-UP/ OPERATION 14
3.2 USER INTERFACE/ DEVICE CONFIGURATION 15
3.3 MAIN MENU 17
3.4 NETWORK CONFIGURATION 21
3.5 FIELD CHARACTERIZATION 31
3.6 SERVICE MENU 32

SECTION 4.0 MAINTENANCE, INSPECTIONS, TROUBLESHOOTING 34
4.1 MAINTENANCE/ INSPECTIONS 34
4.2 TROUBLESHOOTING 34

APPENDIX - A 35
INSPECTION & HANDLING 35
LOCATION OF PROBE ARRAYS & STATIONS 35
MINIMUM INSTALLATION REQUIREMENTS 35
MINIMUM INSTALLATION REQUIREMENTS VARY DEPENDING ON SENSOR DENSITY 36
GENERAL INSTALLATION - ELECTRA-FLO/S5-MM & ELECTRA-FLO/S5-CM STATIONS 38
GENERAL INSTALLATION - ELECTRA-FLO/S5 PROBE ARRAY 38
INSTALLING ELECTRA-FLO/S5 PROBE ARRAYS 96" OR MORE IN LENGTH 40
EXTERNALLY MOUNTED ELECTRA-FLO/S5 PROBES 42
INTERNALLY MOUNTED ELECTRA-FLO/S5 PROBES 42
CABLE CONNECTIONS FOR EXTERNALLY MOUNTED ELECTRA-FLO/S5 PROBE ARRAYS WITH NEMA 1 CONFIGURATION 43
CABLE CONNECTIONS FOR EXTERNALLY MOUNTED ELECTRA-FLO/S5 PROBE ARRAYS WITH NEMA 4 CONFIGURATION 44
CABLE CONNECTIONS - INTERNALLY MOUNTED ELECTRA-FLO/S5 PROBE ARRAYS WITH NEMA 1 CONFIGURATION 46
CABLE CONNECTIONS - INTERNALLY MOUNTED ELECTRA-FLO/S5 PROBE ARRAYS WITH NEMA 4 CONFIGURATION 47
INSPECTION - ELECTRA-FLO G5 TRANSMITTER 48
LOCATION - ELECTRA-FLO G5 TRANSMITTER 48
INSTALLATION - ELECTRA-FLO G5 TRANSMITTER 48
MOUNTING - ELECTRA-FLO G5 TRANSMITTER ENCLOSURE 48
MOUNTING - ELECTRA-FLO G5 TRANSMITTER IN NEMA 1 ALUMINUM ENCLOSURE 49
MOUNTING - ELECTRA-FLO G5 TRANSMITTER IN NEMA 4X NON-METALLIC ENCLOSURE 50
MOUNTING - ELECTRA-FLO G5 TRANSMITTER IN NEMA 4X STAINLESS STEEL ENCLOSURE 51
POWER & SIGNAL CONNECTIONS 52

SECTION 1.0 GENERAL INFORMATION

Thank you for purchasing the ELECTRA-flo 5 Series Thermal Airflow Measurement System. As our valued customer, Air Monitor's commitment to you is to provide fast, reliable service and assistance while continuing to offer you the most accurate and reliable products to meet your flow measurement needs.

1.1 PURPOSE OF THIS GUIDE

This manual provides information regarding the installation, operation and maintenance of your thermal airflow measurement system. This is NOT, nor is it intended to be an electrical or HVAC trade manual.

This manual is the basic reference tool for the ELECTRA-flo G5 Transmitter, including its power connection and associated outputs. The complete system consists of the transmitter and associated probe arrays, airflow stations or fan inlet probes. Refer to supplemental documents for additional information.

1.2 TYPICAL THERMAL AIRFLOW MEASUREMENT SYSTEM INSTALLATION

Air Monitor's ELECTRA-flo G5 transmitter accurately measures the average velocity of flowing air by means of thermal dispersion sensors located in airflow ducts. Temperature is also measured via these sensors. The G5 transmitter can average data from a maximum of 32 individual flow sensors, and is designed to measure airflow in a single duct or fan inlet. An optional true dual channel version provides two separate airflow measurement channels in one transmitter. Analog outputs and an RS485 interface for BACnet® or MODBUS® convey data from the ELECTRA-flo to local controllers or a BMS.

Physical installation details for the ELECTRA-flo/S5 probe arrays or airflow stations can be found in the ELECTRA-flo/S5 Installation Procedures guide, (available at airmonitor.com.)

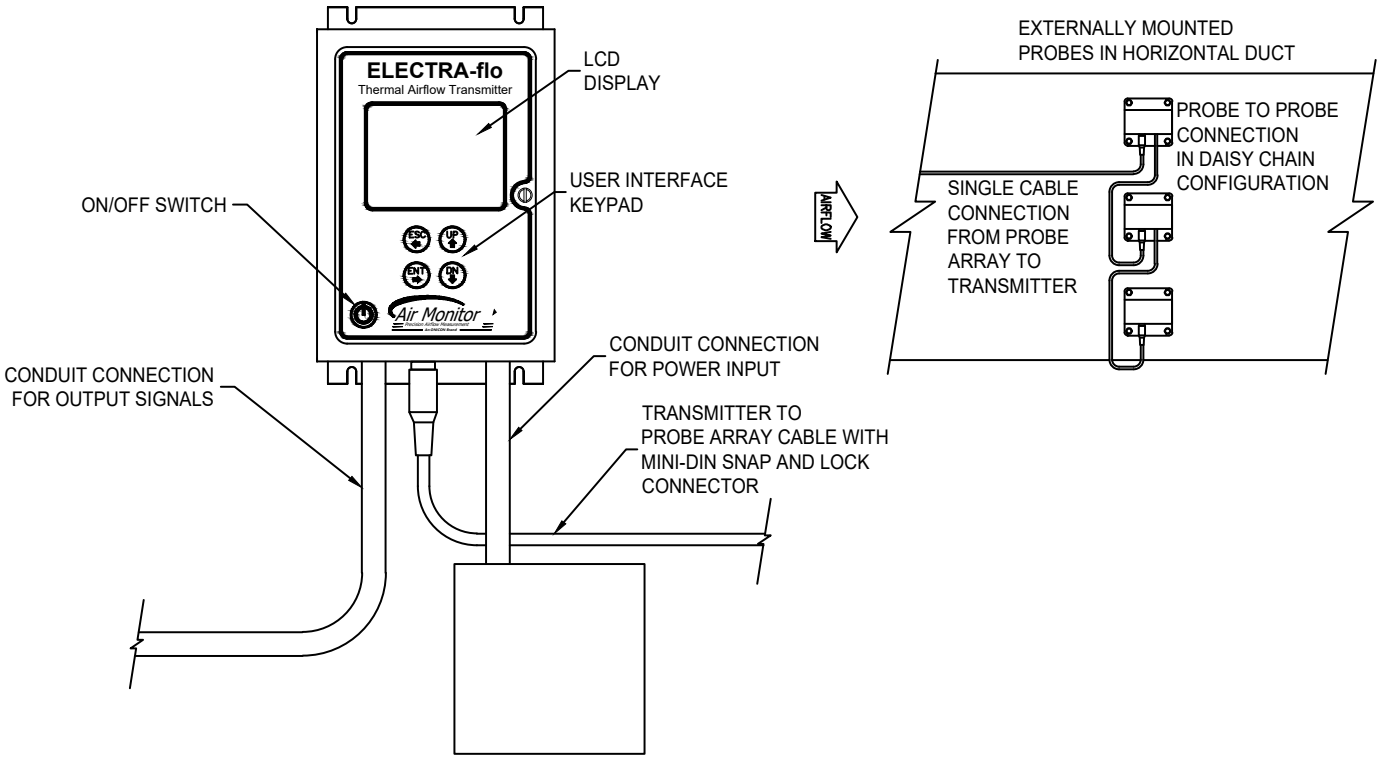

1.3 STANDARD FEATURES AND SPECIFICATIONS*

ELECTRA-flo G5 Transmitter		
PERFORMANCE	SYSTEM CONFIGURATION	Single or dual channel operation Supports up to 32 individual thermal dispersion airflow sensors Provides airflow velocity, flow and temperature Supports multiple airflow measurement system types Provides three (3) field characterization methods
OPERATING CONDITIONS	AMBIENT TEMPERATURE	-20°F to 180°F (Storage), -20°F to 140°F (Operating)
	HUMIDITY	0 to 99% RH, non-condensing
INPUT POWER	24 VAC	20 - 28 VAC, 16 - 90 VA, varies based on # of sensors (# of sensors x 1.1 VA)
	24 VDC	20 - 28 VDC, 16 - 50 W, varies based on # of sensors
I/O SIGNALS	Two (2) analog outputs, selectable based on configuration	
ELECTRONICS ENCLOSURE	AVAILABLE OPTIONS	• Aluminum, NEMA 1 • Stainless steel, NEMA 4X without viewing window • Aluminum , NEMA 1 with conduit connection box • Non-metallic, NEMA 4X with viewing window
	DISPLAY	2.75" x 2" TFT color LCD
PROGRAMMING	Menu driven user interface via four (4) push buttons	
ELECTRICAL CONNECTIONS	POWER	Removable terminal block for use with 14 to 18 AWG wire
	COMMUNICATIONS	Removable terminal block for use with 14 to 22 AWG wire
	I/O	Removable terminal block for use with 14 to 22 AWG wire
PROCESS CONNECTIONS	AVAILABLE OPTIONS	• NEMA 1 enclosure, two (2) mini-DIN connectors XMTR to probes and two (2) ½" conduit openings • NEMA 4X enclosure, two (2) liquid tight cord grips and two (2) ½" conduit openings
NETWORK CONNECTIONS	RS485, BACnet MS/TP or MODBUS RTU	
APPROVALS	UL	60730
	BTL	Certified to BACnet standard ISO 16484-5 rev. 1.12
	FCC	Meets part 15 Subpart B, Class A device requirements
ELECTRA-flo/S5 Thermal Dispersion Probe Array		
PERFORMANCE	SENSOR ACCURACY	Individual sensor accuracy: ±2% of reading from 0 - 5000 FPM
	SYSTEM ACCURACY	Complete system accuracy: ±3% of reading over published velocity range
	VELOCITY RANGE	Ducted mounted installations: 0 - 5000 FPM Station mounted probe arrays: 0-5000 FPM (0-4000 FPM with straightening cell) Fan inlet installations: 0-10,000 FPM
SENSOR DESIGN	Precision matched, hermetically sealed thermistors with laser trimmed resistive heating element Dedicated 16 bit A/D processing of each sensor signal Sensor node consists of two (2) thermistors mounted in a dedicated flow conditioning aperature	
	TEMPERATURE ACCURACY	±0.1°F over operating range of -20°F to 140°F
SENSOR CAPACITY	TRANSMITTER	Maximum of 32 sensors per transmitter, shared between both channels
	PROBE	Maximum of 8 sensors per probe

* SPECIFICATIONS subject to change without notice.

1.3 STANDARD FEATURES AND SPECIFICATIONS CONTINUED*

ELECTRA-flo/S5 Thermal Dispersion Probe Array (Continued)		
SENSOR DENSITY	DUCT & STATION MOUNTED	Three (3) sensor density levels specifiable based on configuration
	FAN INLET	Single or dual sensor configuration per inlet available
PROBE MATERIALS OF CONSTRUCTION	AVAILABLE OPTIONS	• 6063 anodized aluminum, 1⅛" diameter with NEMA 1 enclosure • 6063 anodized aluminum, 1⅛" diameter with NEMA 4 enclosure and IP68 liquid tight cord grips • 6063 anodized aluminum, 1⅛" diameter with NEMA 4 enclosure and ½" conduit connections • 300 series stainless steel, 1⅛" diameter with NEMA 4X enclosure and ½" conduit connections
OPERATING CONDITIONS	FLUID TEMPERATURE	-20°F to 140°F
	HUMIDITY	0 to 99% RH, non-condensing
WIRING CONNECTIONS	AVAILABLE OPTIONS	• Mini-DIN, NEMA 1 only • Conduit opening with terminal blocks • IP68 liquid tight cord grip
DUCT MOUNTED PROBE ARRAYS	MOUNTING OPTIONS	• Rectangular duct, external or internally mounted • Rectangular duct, standoff mount • Circular duct, external or internally mounted
STATION MOUNTED PROBE ARRAYS	CONSTRUCTION OPTIONS	• 14 ga. galvanized steel with 1½" flange • 18 ga. stainless steel with 1½" flange • Aluminum honeycomb airflow straightening cell
ELECTRA-flo/FI Thermal Dispersion Fan Inlet Probe Array		
PERFORMANCE	SENSOR ACCURACY	Individual sensor accuracy: ±2% of reading from 0 - 5000 FPM
	SYSTEM ACCURACY	Complete system accuracy: ±3% of reading over published velocity range[1]
	VELOCITY RANGE	Fan inlet installations: 0-10,000 FPM
SENSOR DESIGN	Precision matched, hermetically sealed thermistors with laser trimmed resistive heating element Each sensor node consists of two (2) thermistors mounted in a dedicated flow conditioning aperature Each sensor node is completely sealed and impervious to water	
	TEMPERATURE ACCURACY	±0.1°F over operating range of -20°F to 140°F
SENSOR CAPACITY	TRANSMITTER	Maximum of 32 sensors per transmitter
SENSOR DENSITY	FAN INLET	Single or dual sensor configuration per inlet available
PROBE MATERIALS OF CONSTRUCTION	6063 anodized aluminum, 1⅛" diameter with remote NEMA 4X poly enclosure	
OPERATING CONDITIONS	FLUID TEMPERATURE	-20°F to 140°F
	HUMIDITY	0 to 100% RH, condensing
WIRING CONNECTIONS	AVAILABLE OPTIONS	• Watertight integral plenum rated cable attached to probe • Conduit opening with terminal blocks
FAN INLET	Stainless steel tube in tube telescoping support struts and stainless steel mounting brackets	

Note[1] Field characterization required to achieve ± 3% system accuracy

* SPECIFICATIONS subject to change without notice.

1.4 MODEL NUMBER CODIFICATION

MODEL SELECTION GUIDE

Model Number Coding = E-flo G5-AB-CDEF-(SPC)

ELECTRA-flo 5 Series Thermal Airflow Measurement System, G5 Transmitter only

A= Channel
1 = Thermal dispersion airflow transmitter with graphical LCD, two (2) programmable analog outputs and RS485 serial communications.
2 = Dual channel thermal dispersion airflow transmitter with graphical LCD, two (2) programmable analog outputs and RS485 serial communication.

B= Enclosure*
1 = NEMA 1 enclosure with cord grips
2 = NEMA 4X SS enclosure w/o viewing window w/ cord grips
3 = NEMA 4X non-metallic enclosure w/ viewing window & cord grips
4 = NEMA 1 enclosure with conduit connection box
5 = NEMA 4X SS enclosure w/o viewing window w/ conduit conn.
6 = NEMA 4X non-metallic enclosure w/ viewing window & conduit conn.

*Conduit connections required for outdoor transmitter installations

C= Outputs
2 = Two (2) analog outputs and one (1) alarm output

D = Communications
1 = RS485

E = Input Power
1 = 24 V AC/DC (Up to 24 sensors)
2 = 24 V AC/DC (25 to 32 sensors)

F=Wiring Connection (A=1 use 1-4, A=2 use A-J)
1 = Mini-DIN, XMTR to probe, 10ft
2 = Mini-DIN, XMTR to probe, 25ft
3 = Mini-DIN, XMTR to probe, 50ft
4 = Mini-DIN, XMTR to probe, 100ft
A = Mini-DIN, XMTR to probe, 10ft & 10ft
B = Mini-DIN, XMTR to probe, 10ft & 25ft
C = Mini-DIN, XMTR to probe, 10ft & 50ft
D = Mini-DIN, XMTR to probe, 10ft & 100ft
E = Mini-DIN, XMTR to probe, 25ft & 25ft
F = Mini-DIN, XMTR to probe, 25ft & 50ft
G = Mini-DIN, XMTR to probe, 25ft & 100ft
H = Mini-DIN, XMTR to probe, 50ft & 50ft
I = Mini-DIN, XMTR to probe, 50ft & 100ft
J = Mini-DIN, XMTR to probe, 100ft & 100ft

SPC=Special Config
000 = None
101 = SS Tags

Model Number Coding = E-flo/S5-AABC-DDEF-GGHH-(SPC)

ELECTRA-flo 5 Series Thermal Airflow Measurement System, Probe Array Only

AA = Probe Mounting Style
R1 = External mount, rectangular
R2 = Internal mount, rectangular
R3 = Internal stand-off mount, rectangular[2]
C1 = External mount, circular
C2 = Internal mount, circular

B = Maximum Probe Length (in inches)

Max Probe Length - Rectangular

A = Up to 18	F = 44 to < 48	K = 72 to < 84
B = 18 to < 24	G = 48 to < 54	L = 84 to < 96
C = 24 to < 30	H = 54 to < 60	M = 96 to < 108
D = 30 to < 36	I = 60 to < 66	N = 108 to < 120
E = 36 to < 44	J = 66 to < 72	O = 120 to < 132

Max Probe Length - Circular

1 = 18 to < 26	5 = 48 to < 66
2 = 26 to < 36	6 = 66 to < 84
3 = 36 to < 42	7 = 84 to < 120
4 = 42 to < 48	

C = Adjacent Side (in inches)

A = Up to 18	G = 48 to < 54	M = 96 to < 108
B = 18 to < 24	H = 54 to < 60	N = 108 to < 120
C = 24 to < 30	I = 60 to < 66	O = 120 to < 132
D = 30 to < 36	J = 66 to < 72	9 = Circular
E = 36 to < 44	K = 72 to < 84	
F = 44 to < 48	L = 84 to < 96	

DD = Probe Level (Based on Straight Run)
L0 = Level 0 (Between 2 & 3)
L1 = Level 1 (Minimum Straight Run Requirements)
L2 = Level 2
L3 = Level 3 (Maximum Straight Run Requirements)
LC = Custom Density

E = Material of Construction Probes
1 = 6063 Annodized Al., 1⅛" dia. with NEMA 1 cast aluminum enclosure.
2 = 6063 Annodized Al., 1⅛" dia. with NEMA 4 cast aluminum enclosure.

F= Wiring Connections Probe to Probe*
1 = Mini-DIN, NEMA 1 **(For E = 1 only)**
3 = Conduit w/ terminal blocks **(Optional for E=2)**
4 = IP68 liquid tight cord grips **(Optional for E = 2)**
*Conduit connections required for outdoor probe installations

GG = Number of Sensors[1]
01 - 32

HH = Number of Probes
01 - 08

SPC=Special Config
000 = None
101 = SS Tags

Notes
1. ***Maximum number of sensors (nodes) / probe is 8***
2. ***Internal stand off mount in circular ducts is NOT allowed***

1.4 MODEL NUMBER CODIFICATION (CONTINUED)

Model Number Coding = E-flo/AB-CD-EFG-(SPC)

ELECTRA-flo 5 Series Thermal Airflow Measurement System, Stations Only

A = Probe Mounting Style
M = External mount in casing only, no cell
C = External mount in casing with cell

B = Damper
M = No Damper
D = With Damper

C = Long Opening Dimension (in inches)
A = 8 to 12
B = > 12 to 24
C = > 24 to 36
D = > 36 to < 45
E = 45 to 60
F = > 60 to 72
G = > 72 to 84
H = > 84 to 96
I = > 96 to 108
J = > 108 to 120
K = > 120 to 132

D = Short Opening Dimensions (in inches)
A = 8 to 12
B = > 12 to 24
C = > 24 to 36
D = > 36 to < 45
E = 45 to 60
F = > 60 to 72
G = > 72 to 84
H = > 84 to 96
I = > 96 to 108
J = > 108 to 120
K = > 120 to 132
9 = Circular

E = Casing Material of Construction
14ga = Rectangle, 18ga = Circular
1 = 14ga. galvanized steel
2 = 18ga. galvanized steel

F = Casing Width (depth) Dimension (in inches)
1 = 8 (Default for Rect. or Circ. with 1 probe)
2 = 10 (Default for Circ. with 2 probes)
3 = 12 (Default for Circ. with 3 probes)
4 = 14 (Default for Circ. with 4 probes)
6 = 24 (Required for ELECTRO-flo/CD)

G = Flange Connection
1 = 1½" 90 deg., Formed (required for rectangular)
2 = 1" flange, 14ga., Welded (Circ up to 24")
3 = 1½" flange, 14ga., Welded (Circ >24" to <45")
4 = 3/16" x 2" bar stock, Welded (Circ ≥45")
5 = Beaded edge, 18ga. C configuration (Circ 8" to 24")
N = Non-standard flange

SPC = Special Configuration
000 = None
101 = SS Tags

1.5 CHECKING THAT YOU RECEIVED EVERYTHING

Carefully open the ELECTRA-flo 5 Series shipping container(s) and remove all equipment. Inspect equipment for any damage (if damaged, contact Air Monitor and your freight company). Verify that the following items have been shipped:

- (1) ELECTRA-flo G5 Transmitter
- (1) or more probe arrays, airflow stations or fan inlet probes
- (1) Installation and Operation Manual
- (1) Factory Set-Up Information Sheet and probe installation instructions

Review the factory setup-up information sheet provided and verify that the W.O. # and serial # match those on the ELECTRA-flo 5 Series Thermal Airflow Measurement System. Verify that the configuration recorded on the factory set-up sheet is correct for your application. Please contact the Air Monitor customer service department if you have questions.

1.6 WORKING ENVIRONMENT

ELECTRA-flo G5 NEMA 1 transmitter enclosures are designed for use in indoor installations that are free of condensing moisture. NEMA 4X enclosures with display windows are designed for use in wet indoor installations. Do not expose these transmitters to direct sunlight, temperature extremes or excessive vibration. The operating ambient air temperature range for both enclosures is -20°F to 140°F.

ELECTRA-flo G5 NEMA 4X transmitter enclosures without windows are designed for indoor or outdoor use. Do not expose these transmitters to excessive vibration. Whenever possible, avoid exposure to direct sunlight. The operating ambient air temperature range is -20°F to 140°F.

1.7 SERIAL NUMBER

The serial number of your ELECTRA-flo 5 Series system is located outside of the G5 transmitter. The serial number is a unique identifier for your product. Please have it available when contacting Air Monitor for assistance regarding your product.

SECTION 2.0 INSTALLATION

The ELECTRA-flo 5 Series Thermal Airflow Measurement System should be installed by experienced HVAC technicians and others with related knowledge and experience with airflow systems. Air Monitor support personnel are available to assist with technical recommendations and to provide guidance by telephone and/or e-mail. On-site field engineering, installation, and service are also available at an additional cost. The installer should use good trade practices and must adhere to all state and local building codes.

Each ELECTRA-flo is individually calibrated, configured and programmed using customer specific application data. Configuration and programming parameters are recorded on the Factory Set-Up Information Sheet provided with the unit. Review this information and verify that the ELECTRA-flo set-up is correct for your application. If any problems or discrepancies are detected, contact Air Monitor's Customer Service Department prior to proceeding.

2.1 SITE SELECTION

Careful attention to the site selection for the system components will help the installers with the initial installation, reduce start-up problems, and make future maintenance easier. For example, do not install the ELECTRA-flo G5 transmitter where it will be difficult for personnel to perform periodic maintenance. When selecting a site for mounting the system components, consider the criteria under Section 1.6: WORKING ENVIRONMENT, as well as the following:

- The transmitter must be installed in a way that will allow the probe-to-transmitter cables from the probe arrays or stations to reach the Mini-DIN receptacles on the bottom of the transmitter. Standard probe-to-transmitter cable lengths are 10' with optional 25', 50' and 100' cables available.
- Terminal connections inside each probe connection box allow for custom sizing of cable lengths for a clean installation. Do not cut off the Mini-DIN connectors. For dual systems, all probes can be interconnected and brought back to the transmitter with a single cable, or each individual system can have a home run to the transmitter.
- Please refer to Appendix A for flow probe and airflow station installation procedures.

2.2 TRANSMITTER DIMENSIONS

NEMA 1 ENCLOSURE

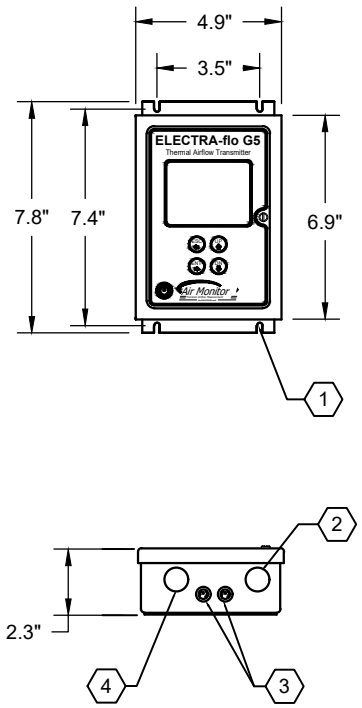

NEMA 4X- NON-METALLIC ENCLOSURE

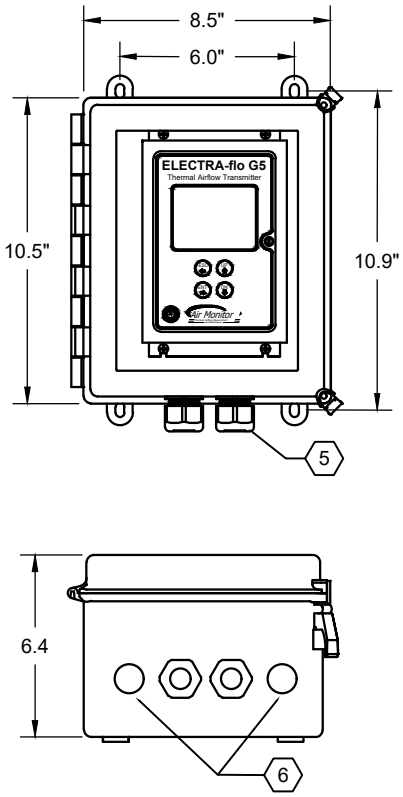

NEMA 4X- STAINLESS STEEL ENCLOSURE

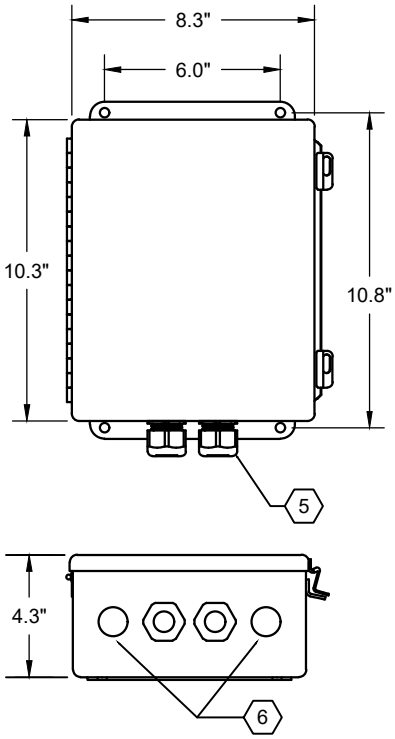

1. Two (2) 0.188 mounting slots
2. ½" conduit field power opening for connection
3. Two (2) Mini-DIN connectors for probe
4. ½" conduit analog output/network opening for connection
5. Two (2) ½" NPT liquid tight cord grips
6. Two (2) ½" conduit openings with knockouts

2.3 TRANSMITTER INSTALLATION

IMPORTANT NOTE
This section may be skipped if the transmitter was ordered factory mounted to the station.

Find an easily accessible location where electrical connections can be made and display readings can be taken from the floor level. The mounting surface must be structurally sound and capable of withstanding a minimum weight of 40lbs (18kg). Use the following screws for mounting.

For NEMA 1 Enclosure:
(4) Machine screws - #8-32 x 1.5”
(4) Wood screws - #8 x 1.5”
(4) Concrete screws - 3/16” x 1.5”
For NEMA 4X Enclosure:
(4) Machine screws - HHMS .25-20 x 1.5”
(4) Wood screws - FHLS .25 x 1.5”
(4) Concrete screws - HHCS .25 x 1.5”

The ELECTRA-flo G5 transmitter can be mounted in any position provided it is secured using all four mounting holes.

Reasonable consideration should be given to clearances for electrical connections.

Once a suitable location is found, use the transmitter as a template to mark the centers of the four mounting holes.

Drill four pilot holes at the marked locations.

2.4 TRANSMITTER WIRING CONNECTIONS

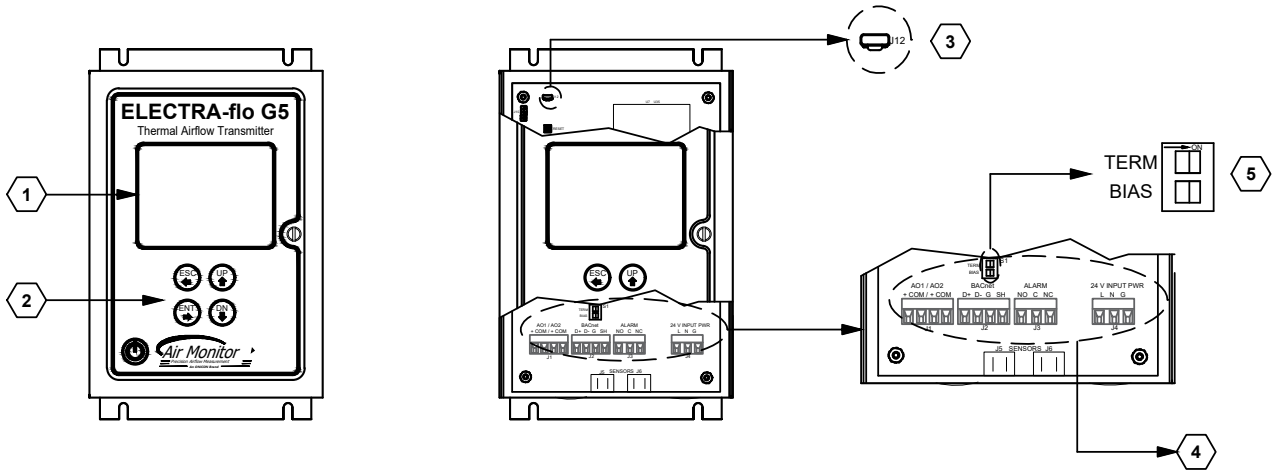

1. Graphical LCD for user set-up, commissioning and real-time data display
2. User programming and display keys
3. Micro USB connection location. This can only be used with Air Monitor firmware update tools. Contact Air Monitor service for assistance
4. I/O, serial communication, alarm and power input terminal block location Refer to section 2.4.2 for additional information
5. Termination resisitor / bias switch location. Refer to section 3.4 for additional information

2.4.1 ELECTRA-flo G5 Power/ Signal Connections

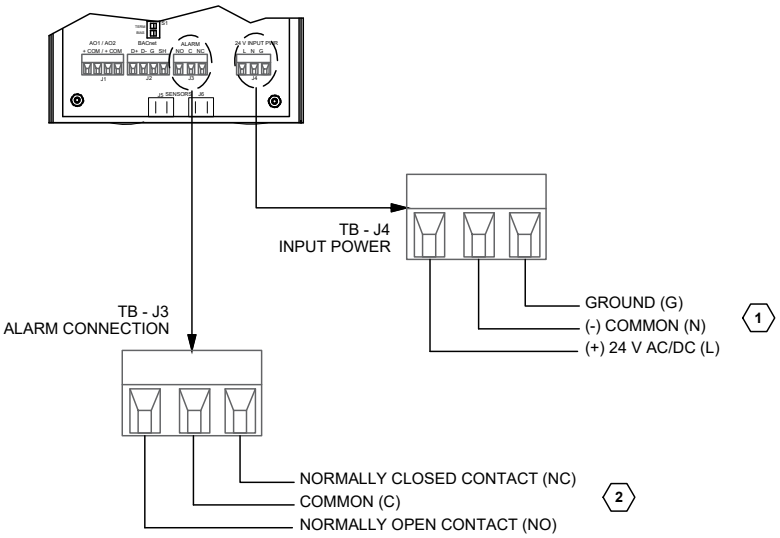

1. Input power requirements:
   - 24 VAC (20-28 VAC), 16-90 VA, varies based on number of sensors.
   - 24 VDC (20-28 VDC), 16-50 W, varies based on number of sensors.

2. Alarm can be set for either flow or temperature with upper and lower limits. Refer to page 20 for more information.

2.4.2 ELECTRA-flo G5 Analog Outputs & Serial Communication

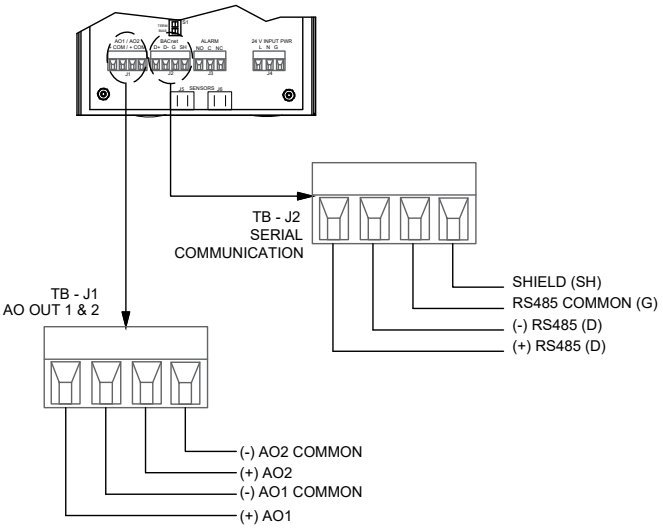

IMPORTANT NOTE
Two (2) analog outputs (4-20mA, 0-10 VDC or 0-5 VDC) are available based on configuration. Refer to page 19 for more information.

SECTION 3.0 OPERATION

3.1 START-UP/ OPERATION

After power and signal wiring has been verified in accordance with Section 2.4, activate the 24 VAC / VDC power source.

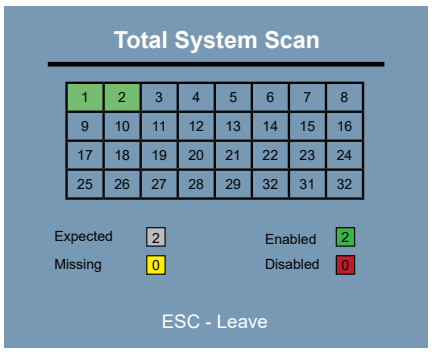

Start-up
Press the power button located in the lower left corner of the display. The display will show a bar graph as the program loads. Once the program is loaded, the transmitter will scan for sensors and display their status. The normal operating screen will then be displayed.

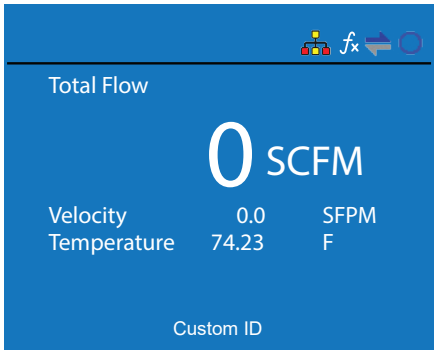

Default Display Screen
The display screen provides three lines of process data. The data shown is field configurable. The default configuration indicates flow, velocity and temperature. A field configurable Custom ID is also shown at the bottom of the screen.

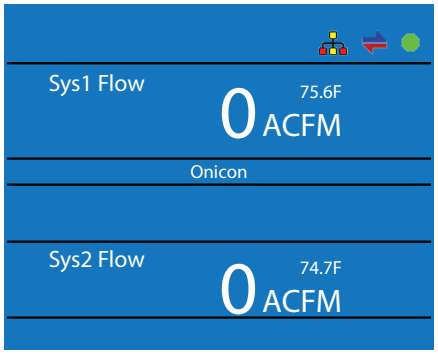

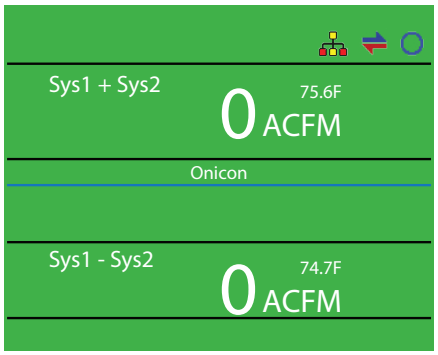

Default Dual Channel Display Screens
The true dual channel version of the ELECTRA-flo G5 transmitter has two display screens for process data. Sys1 Flow and Sys2 Flow are provided on the first screen. Sys1 Flow + Sys2 Flow and Sys1 Flow - Sys2 Flow are provided on the second screen. The Up arrow is used to toggle between the screens. The field configurable Custom ID is also shown.

3.1 START-UP/ OPERATION (CONTINUED)

Status Icons

The following icons will be displayed at the top of the normal operating screen whenever the function is active. Refer to the alert code table on page 33 for additional status codes.

Transmitter communicating normally on the BACnet or MODBUS network.

Send/Receive arrows flashing indicates the sensor(s) and transmitter are communicating normally.

Transmitter processor normal.

Field Characterization has been turned on.

3.2 USER INTERFACE / DEVICE CONFIGURATION

The ELECTRA-flo G5 transmitter is fully field configurable. The transmitter is configured using the display and 4-button membrane keypad. Individual key functions are described below.

ENT: Enters menu item from main or service menu; moves cursor to next item below when in sub-menu.

ESC: Exits current page or sub-menu item.

UP Arrow: Toggles between display pages on dual channel meters. In the menu mode, it moves cursor “up” through main and service menus and changes character in sub-menu items.

DOWN Arrow: Moves cursor “down” through main and service menu and changes character in sub-menu items.

Device configuration options are provided on individual display pages shown in the main menu table below. A separate service menu is also provided for diagnostic and product information. The true dual channel main, service and network configuration menus are shown on the next page in separate tables.

3.2 USER INTERFACE / DEVICE CONFIGURATION (CONTINUED)

Configuration Menus

MAIN MENU SELECTION	DESCRIPTION
Density Compensation	Select density compensation type for flow output (Actual or Standard CFM)
Select System of Units	Select system of units (US or SI)
Select Units of Measure	Select velocity and flow units
Flow Configuration	Select and configure flow and application parameter (ducted or fan inlet, duct size, fan inlet diameter, etc.)
Display Configuration	Set brightness and inactivity timeout interval
Analog Output Configuration	Configure analog output type, value and averaging filter
Display Averaging Filter	Configure display averaging filter
Zero Lockdown	Adjust zero lockdown (below a FPM set point, drives display and output to zero)
Alarm/Alert Configuration	Configure alarm type, upper and lower limits
Network Configuration	Configure BACnet MS/TP or MODBUS RTU network connection
Field Characterization	For information on field characterization, please see page 31
SERVICE MENU SELECTION	**DESCRIPTION**
Password Configuration	Enable/disable and change password
Total System Scan	Displays sensor enabled/disabled status
Sensor Enable/Disable	Enable or disable system sensors
Sensor Data Scan	Displays individual sensor data
Sensor Alert Scan	Displays alert codes for each sensor
Custom ID	Configure ID (tag) of unit (also device name displayed in BACnet)
Restore Factory Setting	Restores display settings to original factory set-up
Product Information	Displays product information (Serial number, Work Order #, etc.)
Configure Probes vs. Nodes	Configure Number of probes and sensors per probe

MAIN MENU System1 & System2 (Dual Channel Version Only)

MAIN MENU SELECTION	DESCRIPTION
Density Compensation	Select density compensation type for flow output (Actual or Standard CFM)
Select System of Units	Select system of units (US or SI)
Select Units of Measure	Select velocity and flow units
Flow Configuration	Select and configure flow and application parameter (ducted or fan inlet, duct size, fan inlet diameter, etc.)
Display Configuration	Set brightness and inactivity timeout interval
Analog Output Configuration	Configure analog output type, value, and averaging filter
Display Averaging Filter	Configure display averaging filter
Zero Lockdown	Adjust zero lockdown (below a FPM set point, drives display and output to zero)
Alarm/Alert Configuration	Configure alarm type, upper and lower limits
Field Characterization	For information on field characterization, please see page 31

3.2 USER INTERFACE / DEVICE CONFIGURATION (CONTINUED)

SERVICE MENU System1 & System2 (Dual Channel Version Only)

SERVICE MENU SELECTION	DESCRIPTION
Password Configuration	Enable/disable and change password
Total System Scan	Displays sensor enabled/disabled status
Sensor Enable/Disable	Enable or disable system sensors
Sensor Data Scan	Displays individual sensor data
Sensor Alert Scan	Displays alert codes for each sensor
Custom ID	Configure ID (tag) of unit (also device name displayed in BACnet)
Restore Factory Setting	Restores display settings to original factory setup
Product Information	Displays product information (Serial number, Work Order #, etc.)
Configure Probes vs. Nodes	Configure Number of probes and sensors per probe

NETWORK CONFIGURATION	DESCRIPTION
Network Configuration	Configure BACnet MS/TP or MODBUS RTU Network Connection

3.3 MAIN MENU

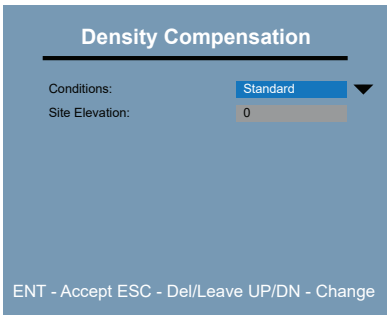

Density Compensation - Density compensation can be selected to be actual flow or flow corrected to standard conditions. The default factory setting is for actual conditions. The ELECTRA-flo G5 also allows for inputting the site elevation, which will add density compensation for average atmospheric pressure based upon elevation above sea level.

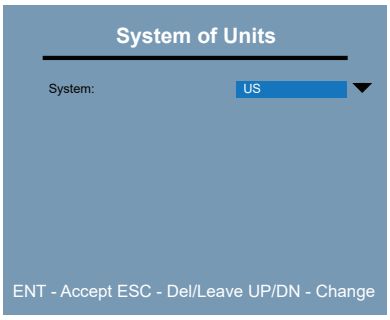

Select System of Units - US or SI units can be selected. US units will display in CFM and °F. SI units will display in L/s and °C.

IMPORTANT NOTE
When changing between US and SI units, the flow configuration information will need to be converted and updated. This is not done by the transmitter. The user must convert and input.

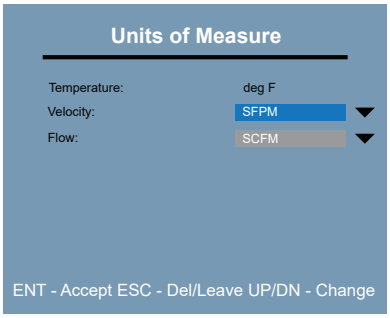

Select Units of Measure – US and SI velocity and flow units can be selected.

3.3 MAIN MENU (CONTINUED)

Flow Configuration - The flow configuration menu provides access to modify the application specific parameters.

IMPORTANT NOTE
All transmitters are factory configured for the intended application. Changes to the factory configuration should not be required. A Factory Set-Up Sheet is provided with each transmitter and provides the details for all factory configured parameters.

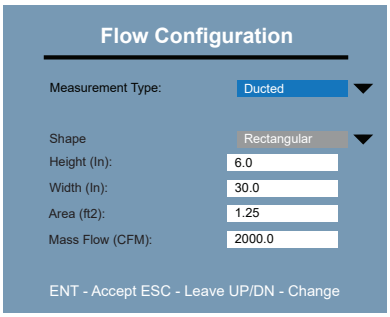

Measurement Type - Indicates whether the probes are installed in a ducted or a fan inlet application. Ducted applications can be rectangular, or circular. For fan inlet applications, the transmitter can be used with single fan inlets, double fan inlets or multiple inlet (same size) fan walls. One transmitter accepts up to 32 sensors; typically, there are two sensors per fan inlet, optional construction uses one sensor per inlet (for fan walls).

Flow Configuration - Ducted

Select the proper duct shape (rectangular, or circular).
Enter the duct dimensions (inches or millimeters).
Area (cross-sectional duct area) is automatically calculated.
Enter the Max Flow (maximum airflow) in CFM or L/s.

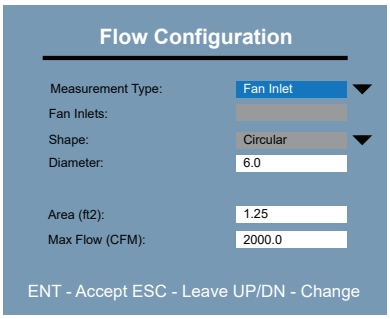

Flow Configuration - Fan Inlet

Select the number of fan inlets being measured (max = 32).
Shape is automatically set to Circular.
Enter the diameter of the fan inlet(s).
Area (cross-sectional duct area) is automatically calculated.
Enter the Max Flow (maximum airflow) in CFM or L/s.

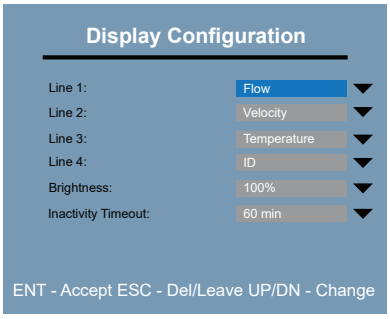

Display Configuration

This screen allows the user to set parameters on various lines of the display. There are four display lines on the ELECTRA-flo G5.

Line 1 - Flow (typical), Velocity or Temperature

Line 2 - Velocity, Flow or None

Line 3 - Temperature, Flow or None

Line 4 - Custom ID or None. This field is settable over BACnet or through the Service Menu. It is typically used to describe the transmitter location in the building.

Brightness - Allows the user to set the brightness of the display in real time.

Inactivity Timeout - The time period which holds the display in menu mode. When the timer expires, the display is returned to the main display screen showing the process values.

IMPORTANT NOTE
The optional true dual channel version of the ELECTRA-flo G5 only displays flow.

3.3 MAIN MENU (CONTINUED)

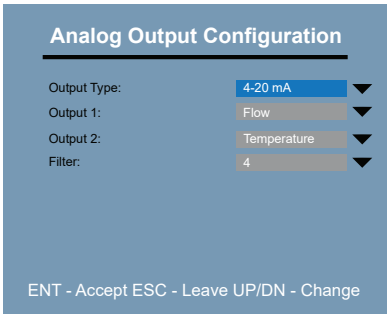

Analog Output Configuration

The ELECTRA-flo G5 transmitter is equipped with dual analog outputs. The Analog Output Configuration menu configures the analog output type, parameter and filter.

Output Type: 4-20 mA DC, 0-5 VDC or 0-10 VDC
Output 1 and 2: Flow, Velocity or Temperature

Optional True Dual Channel Version

Output 1: Flow, Temperature or SYS1 Flow Add
Output 2: Flow, Temperature or SYS2 Flow Subt

Airflow: Available on connector J1, terminals AO1+ and AO1- or AO2+ and AO2-. The full scale output is equal to Max Flow as programmed into the ELECTRA-flo G5 transmitter on the Flow Configuration menu.

Temperature: Available on connector J1, terminals AO1+ and AO1- or AO2+ and AO2-. The temperature analog output has a fixed scale of -40°F to 140°F.

The filter has a minimum setting of 0 to a maximum setting of 10. To disable the filter, select Off.

IMPORTANT NOTE: Optional True Dual Channel Version

- ***Sys1 and Sys2 full scale flow values are set in the Sys1 and Sys2 flow configuration menus***
- ***Sys1 Flow Add full scale = Sys1 max flow + Sys2 max flow***
- ***Sys2 Flow Subt full scale = Sys1 flow max - Sys2 flow max***

3.3 MAIN MENU (CONTINUED)

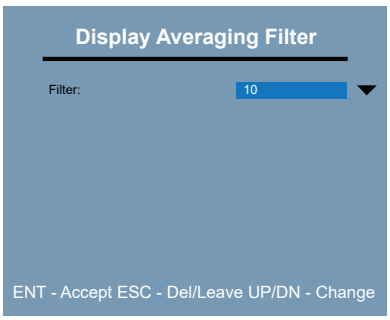

Display Averaging Filter

The Display Averaging Filter filters the data shown on the display. It affects all elements of the display. The filter has 1-10 settings; 1 is the lightest filter, and 10 represents the heaviest filter. It also has an Off setting.

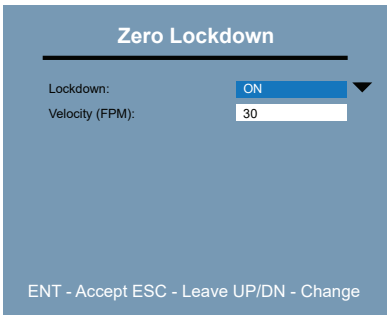

Zero Lockdown

Zero Lockdown will drive the displayed flow and velocity, as well as the associated outputs, to zero when the velocity is below the set point. As very low air velocities tend to be noisy and unstable, it may be best for control purposes to raise the zero lockdown velocity to an appropriate threshold in which the velocity is steady and reliable.

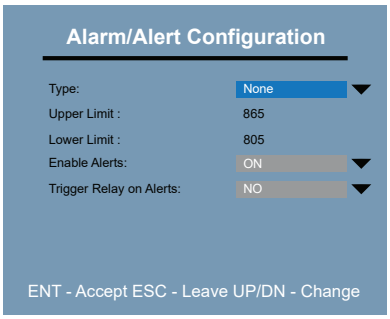

Alarm/Alert Configuration

The Alarm/Alert Configuration menu provides access to select and configure the transmitter alarm and alerts.

Type (Alarm type): Can be either Flow or Temperature with Upper and Lower limits.

- If the process value (Type) exceeds the Upper or Lower Limit, the relay will change state from the default of NO or NC and the Type will change to red on the main display (see the wiring diagram for Normally Open and Normally Closed configurations).
- When the process value recovers to be within the Upper and Lower Limits, the relay will return to the default state and the Type will return to black. Limit Units are shown in parentheses. These units are controlled by the System of Units and the Units of Measure. If the units are US and the flow is CFH, CFH will be the units used in Limits.

Enable Alerts: determines if alert messages are displayed possibly indicating issues with sensors or the transmitter.

Trigger Relay on Alers: the relay will change state from the default of NO or NC if an Enable Alerts is ON and an alert has occurred and was active for 20 continuous seconds.

3.4 NETWORK CONFIGURATION

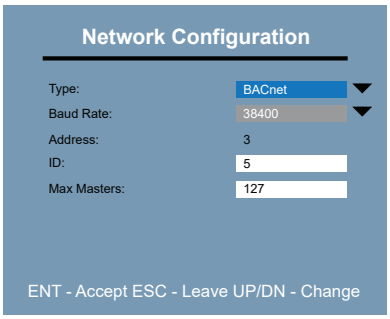

Network Configuration

The ELECTRA-flo G5 is provided with BACnet MS/TP and Modbus RTU as serial communications protocol options. BACnet is the default setting. The field configurable serial communications interface is described on the following pages. Refer to section 2.4 for detailed information on terminal locations and wiring connections.

Air Monitor recommends that 3-wire network cables with a separate shield be used for communications. The interface can be operated as a 2-wire network with no common, but this configuration is more susceptible to noise.

Type – Select BACnet MS/TP or Modbus RTU. Modbus network configuration information begins on page 25.

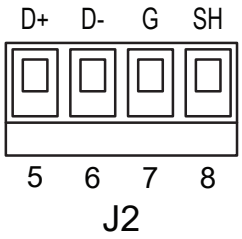

BACnet MS/TP

Select appropriate Baud Rate, Address, ID and Max Masters. BACnet MS/TP serial interface connections are made at J2 terminals labeled D+, D-, G and SH. The positive RS485 connection is made to D+, the negative connection is made to D-. The 3-wire common connection is made to G and the shield drain is connected to SH.

CAUTION
Do not connect shield drains to the "G" terminal.

Transceiver: 3-wire, half duplex (1/3 unit load)

Recommended maximum units per segment: 32

Baud rate(s): 9600, 19200, 38400, 57600, 115200 (default 38400) unless specified by end user

MS/TP MAC Address range: 1 – 255

BACnet device instance number range: 0 – 4,194,303

Max master: 1 – 127

End of line termination: Jumper selectable 120 Ohms or none. Only use on end of line.

Biasing: Jumper selectable 549 Ohms or none. Only one device on the network should provide biasing.

Flow control: none

The Custom ID menu page provides the Device object description property over BACnet and on the display. This property is writable over the network.

BACnet Object Types

BACnet Object Type and number of Objects implemented:

Device: 1

Analog Input - Reports the average temperature or average flow. Also reports individual sensor velocity or sensor temperature. See page 23 for more details.

PROTOCOL IMPLEMENTATION STATEMENT

BACnet Protocol Revision: 12

Device Profile (Annex L): BACnet Application Specific Controller (B-ASC)

MS/TP master (Clause 9), baud rate(s): 9600, 19200, 38400, 56700, 76800, 115200

Device Address Binding: No

BBMD Support Registration By Foreign Devices: No

Character Set Supported: ANSI X3.4

BACnet Interoperability Building Blocks Supported (Annex K):

Data Sharing – Read Property-B (DS-RP-B)

Data Sharing – Read Property Multiple-B (DS-RPM-B)

Data Sharing – Write Property-B (DS-WP-B)

Device Management – Dynamic Device Binding-B (DM-DDB-B)

Device Management – Dynamic Object Binding-B (DM-DOB-B)

Device Management – Device Communication Control-B (DM-DCC-B)

Device Management – Reinitialize Device-B (DM-RD-B)

STANDARD OBJECT TYPES SUPPORTED

Device Object

Property	Default Value	Read-Only or Writable	Comment
Object Identifier	1	Writable	0 – 4,194,303
Object Name	ELECTRA-flo	Writable	Alpha-numeric; 20 char limit. Linked to "Custom ID" setting in the Service Menu. Also displays on the bottom of the LCD display on transmitter.
Object Type	Device	Read-only	
System Status	Operational	Read-only	
Vendor Name	Air Monitor Corporation	Read-only	
Model Name	ELECTRA-flo	Read-only	
Location	Default Location	Writable	
Description	Thermal	Writable	
Protocol Version	1	Read-only	
Protocol Revision	9	Read-only	
Services Supported	readProperty, readPropertyMultiple, writeProperty, deviceCommunicationControl, reinitializedevice, who-has, who-is	Read-only	
Object Types Supported	Analog-input, Device	Read-only	
Object List	Varies: (device, 1), (analog input, 0 - X) where X = 1 + (No. of sensors *2)	Read-only	
Max ADPU Length	128	Read-only	
Segmentation Supported	No Segmentation	Read-only	
APDU Time-out	3000	Read-only	
# of APDU Retries	3	Read-only	
Max Master	127	Writable	
Device Address Binding	{}	Read-only	
Database Revision	3	Read-only	

Analog Inputs

Property	Default Value	Read-only or Writable
Object Identifier	Analog Input-0 to Analog Input-X	Read-only
Object Name	Various	Read-only
Object Type	Analog-input	Read-only
Present Value	REAL	Read-only
Status Flags	F, F, F, F	Read-only
Event State	Normal	Read-only
Out of Service	FALSE	Read-only
Description	Various	Writable
Location	Various	Writable
Units	Various	Read-only

The Air Monitor BACnet stack supports the optional property “DESCRIPTION”. This is used to indicate the type of information in the object. For example, for an ELECTRA-flo system, the description will indicate as “Total Flow” for average flow, or “Avg Temp” for average temperature. If the object belongs to a sensor in the system, it will be indicated as “SensorN Velocity” or “SensorN Flow”, where N is the sensor address. The number of AI objects is determined by the total number of sensors in the system x 2 with an additional 2 AI objects for system average flow and system average temperature. For example, an ELECTRA-flo system with 8 sensors will have a total of 18 AI objects.

Usage of Status Flags

- Each object supports status bits IN_ALARM, FAULT, and OUT_OF_SERVICE.
- The OOS property indicates the physical input to the object is not in service. This will be set by the transmitter if someone intentionally removes the sensor from the network. If the transmitter determines there is a problem with any sensor in question, the OOS bit is set along with the FAULT bit. If the OOS property is set, data from the physical device will not be used in any calculation.
- IN_ALARM is set for values which exceed the predetermined values set in the transmitter memory. This field only affects the Avg Temp and Avg Flow Analog Input objects

BACnet Engineering Units for Analog Inputs (Defaults)
Flow Rates: Cubic feet per minute, Liters per minute
Temperatures: Degrees Fahrenheit, Degrees Celsius

ANALOG INPUT OBJECTS	
Object Identifier	Function
Analog Input 0	Average Flow Rate
Analog Input 1	Average Temperature
Analog Input (1 + X)	Sensor X Velocity
Analog Input (2 + X)	Sensor X Temperature

ANALOG INPUT OBJECTS (Dual Channel)	
Object Identifier	Function
Analog Input 0	Average Sys1 Flow
Analog Input 1	Average Sys1 Temperature
Analog Input 2	Average Sys2 Flow
Analog Input 3	Average Sys2 Temperature
Analog Input 4	Sys Flow Plus
Analog Input 5	Sys Flow Minus
Analog Input 6	Sys_1_Velocity_1
Analog Input 7	Sys_1_Temperature_1
The number of Sys_1_Vel & Sys_1_Temp objects will vary depending on the number of sensors provided with the channel 1 probe(s).	
Analog Input X	Sys_2_Velocity_1
Analog Input X+1	Sys_2_Temperature_1
The number of Sys_2_Vel & Sys_2_Temp objects will vary depending on the number of sensors provided with the channel 2 probe(s).	

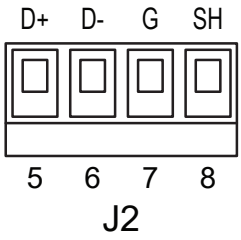

MODBUS RTU
Select appropriate Baud Rate, Address and parity setting. MODBUS serial interface connections are made at J2 terminals labeled D+, D-, G and SH. The positive RS485 connection is made to D+, the negative connection is made to D-. The 3-wire common connection is made to G and the shield drain is connected to SH.

CAUTION
Do not connect shield drains to the "G" terminal.

Transceiver: 3-wire, half duplex (1/3 unit load)
Recommended maximum units per segment: 32
Baud rate(s): 9600, 19200, 38400, 57600, 115200 (default 38400) unless specified by end user
Address range: 1 – 255
Data format: 8-bit
Stop bits: 1
Parity: Odd, Even or None
End of line termination: Jumper selectable 120 Ohms or none. Only use on end of line.
Biasing: Jumper selectable 549 Ohms or none. Only one device on the network should provide biasing.
Flow control: none

REPORT SLAVE ID FUNCTION CODE

The MODBUS implementation of the ELECTRA-flo supports the use of function code 17, Report Slave ID.

When a message is sent to the meter requesting the slave ID, the following message is returned: ELECTRA-flo G5

The meter will report data in decimal or HEX, depending on the control system settings. The data must be converted from decimal/HEX to ASCII in order to form the string.

Function Codes Supported:
01 - Read Coil(s)
02 - Read Discrete Input(s)
03 - Read Holding Register(s)
04 - Read Input Register(s)
15 - Write Multiple Coils
17 - Report Slave ID

ELECTRA-flo G5 MODBUS REGISTERS						
MODBUS INPUT REGISTERS						
DEVICE	FLOW			TEMPERATURE		UNITS
	Address	Data Type		Address	Data Type	
System Average	30000	float		30002	float	see Register 30201
DEVICE	VELOCITY			TEMPERATURE		UNITS
Sensor 1	30004	float		30006	float	see Register 30200
Sensor 2	30008	float		30010	float	see Register 30200
Sensor 3	30012	float		30014	float	see Register 30200
Sensor 4	30016	float		30018	float	see Register 30200
Sensor 5	30020	float		30022	float	see Register 30200
Sensor 6	30024	float		30026	float	see Register 30200
Sensor 7	30028	float		30030	float	see Register 30200
Sensor 8	30032	float		30034	float	see Register 30200
Sensor 9	30036	float		30038	float	see Register 30200
Sensor 10	30040	float		30042	float	see Register 30200
Sensor 11	30044	float		30046	float	see Register 30200
Sensor 12	30048	float		30050	float	see Register 30200
Sensor 13	30052	float		30054	float	see Register 30200
Sensor 14	30056	float		30058	float	see Register 30200
Sensor 15	30060	float		30062	float	see Register 30200
Sensor 16	30064	float		30066	float	see Register 30200
Sensor 17	30068	float		30070	float	see Register 30200
Sensor 18	30072	float		30074	float	see Register 30200
Sensor 19	30076	float		30078	float	see Register 30200
Sensor 20	30080	float		30082	float	see Register 30200
Sensor 21	30084	float		30086	float	see Register 30200
Sensor 22	30088	float		30090	float	see Register 30200
Sensor 23	30092	float		30094	float	see Register 30200
Sensor 24	30096	float		30098	float	see Register 30200
Sensor 25	30100	float		30102	float	see Register 30200
Sensor 26	30104	float		30106	float	see Register 30200
Sensor 27	30108	float		30110	float	see Register 30200
Sensor 28	30112	float		30114	float	see Register 30200
Sensor 29	30116	float		30118	float	see Register 30200
Sensor 30	30120	float		30122	float	see Register 30200
Sensor 31	30124	float		30126	float	see Register 30200
Sensor 32	30128	float		30130	float	see Register 30200

INPUT REGISTERS FOR SYSTEM VARIABLES			
DESCRIPTION	**ADDRESS**	**DATA TYPE**	**DESCRIPTION**
System Velocity Units	30200	uint16_t	1 = FPM, 2 = FPS, 3 = MPM, 4 = MPS
System Flow Units	30201	uint16_t	1 = CFM, 2 = CFH, 3 = L/S, 4 = L/M, 5 = M3H
System Status	30202	uint16_t	1= ALL_OK, 2 = IN ALARM, 3 = IN FAULT, 4 = OOS
System Node Total	30203	uint16_t	1 - 32 NODES ALLOWED
Version	30204	uint16_t	MSB = Major, LSB = Minor
Version - 2	30205	uint16_t	MSB = Patch, LSB = Build number
Duct Shape	30206	uint16_t	1 = Rect, 2 = Round, 4 = OTHER, Fan Inlet = 5
Design Flow Max Setting	30207	float	Max Flow to scale Analog Outputs
Duct Area	30209	float	Duct area size in ft^2 or m^2
DISCREET INPUTS FOR SYSTEM VARIABLES			
DESCRIPTION	**ADDRESS**	**DATA TYPE**	**DESCRIPTION**
Sensor Enabled	10000	boolean	Bit0-Bit15 Sensor Enabled
Sensor Enabled	10001	boolean	Bit16-Bit31 Sensor Enabled
System Units	10002	boolean	Coil 1: 1 = SI, Bit 0 : 0 = US
System Conditions	10003	boolean	Coil 2: 1 = Std, Bit 0 : 0 = Actual
COILS FOR SYSTEM VARIABLES			
DESCRIPTION	**ADDRESS**	**DATA TYPE**	**DESCRIPTION**
K-factor	00001	boolean	1 = ON, 0 = OFF
System Reset	00002	boolean	1 = RESET
K-factor	00003	boolean	Returns the state of the K-factor
DESCRIPTION	**Function Code**	**DATA TYPE**	**DESCRIPTION**
report slave ID	17000	ASCII	Returns string "ELECTRA-flo G5"

ELECTRA-flo G5 DUAL MODBUS REGISTERS						
MODBUS INPUT REGISTERS						
DEVICE	**FLOW**			**TEMPERATURE**		**UNITS**
	Address	**Data Type**		**Address**	**Data Type**	
System 1 Average	30000	float		30002	float	see Register 30401
DEVICE	**VELOCITY**			**TEMPERATURE**		**UNITS**
Sensor 1	30004	float		30006	float	see Register 30400
Sensor 2	30008	float		30010	float	see Register 30400
Sensor 3	30012	float		30014	float	see Register 30400
Sensor 4	30016	float		30018	float	see Register 30400
Sensor 5	30020	float		30022	float	see Register 30400
Sensor 6	30024	float		30026	float	see Register 30400
Sensor 7	30028	float		30030	float	see Register 30400
Sensor 8	30032	float		30034	float	see Register 30400
Sensor 9	30036	float		30038	float	see Register 30400
Sensor 10	30040	float		30042	float	see Register 30400
Sensor 11	30044	float		30046	float	see Register 30400
Sensor 12	30048	float		30050	float	see Register 30400
Sensor 13	30052	float		30054	float	see Register 30400
Sensor 14	30056	float		30058	float	see Register 30400
Sensor 15	30060	float		30062	float	see Register 30400
Sensor 16	30064	float		30066	float	see Register 30400
Sensor 17	30068	float		30070	float	see Register 30400
Sensor 18	30072	float		30074	float	see Register 30400
Sensor 19	30076	float		30078	float	see Register 30400
Sensor 20	30080	float		30082	float	see Register 30400
Sensor 21	30084	float		30086	float	see Register 30400
Sensor 22	30088	float		30090	float	see Register 30400
Sensor 23	30092	float		30094	float	see Register 30400
Sensor 24	30096	float		30098	float	see Register 30400
Sensor 25	30100	float		30102	float	see Register 30400
Sensor 26	30104	float		30106	float	see Register 30400
Sensor 27	30108	float		30110	float	see Register 30400
Sensor 28	30112	float		30114	float	see Register 30400
Sensor 29	30116	float		30118	float	see Register 30400
Sensor 30	30120	float		30122	float	see Register 30400
Sensor 31	30124	float		30126	float	see Register 30400
Sensor 32	30128	float		30130	float	see Register 30400
MODBUS INPUT REGISTERS						
DEVICE	**FLOW**			**TEMPERATURE**		**UNITS**
	Address	**Data Type**		**Address**	**Data Type**	
System 2 Average	30200	float		30202	float	see Register 30401
Sensor 1	30204	float		30206	float	see Register 30400

Sensor 2	30208	float		30210	float	see Register 30400
Sensor 3	30212	float		30214	float	see Register 30400
Sensor 4	30216	float		30218	float	see Register 30400
Sensor 5	30220	float		30222	float	see Register 30400
Sensor 6	30224	float		30226	float	see Register 30400
Sensor 7	30228	float		30230	float	see Register 30400
Sensor 8	30232	float		30234	float	see Register 30400
Sensor 9	30236	float		30238	float	see Register 30400
Sensor 10	30240	float		30242	float	see Register 30400
Sensor 11	30244	float		30246	float	see Register 30400
Sensor 12	30248	float		30250	float	see Register 30400
Sensor 13	30252	float		30254	float	see Register 30400
Sensor 14	30256	float		30258	float	see Register 30400
Sensor 15	30260	float		30262	float	see Register 30400
Sensor 16	30264	float		30266	float	see Register 30400
Sensor 17	30268	float		30270	float	see Register 30400
Sensor 18	30272	float		30274	float	see Register 30400
Sensor 19	30276	float		30278	float	see Register 30400
Sensor 20	30280	float		30282	float	see Register 30400
Sensor 21	30284	float		30286	float	see Register 30400
Sensor 22	30288	float		30290	float	see Register 30400
Sensor 23	30292	float		30294	float	see Register 30400
Sensor 24	30296	float		30298	float	see Register 30400
Sensor 25	30300	float		30302	float	see Register 30400
Sensor 26	30304	float		30306	float	see Register 30400
Sensor 27	30308	float		30310	float	see Register 30400
Sensor 28	30312	float		30314	float	see Register 30400
Sensor 29	30316	float		30318	float	see Register 30400
Sensor 30	30320	float		30322	float	see Register 30400
Sensor 31	30324	float		30326	float	see Register 30400
Sensor 32	30328	float		30330	float	see Register 30400
MODBUS HOLDING REGISTERS						
DEVICE	**FLOW**					**UNITS**
	Address	**Data Type**				
System Flow Plus	40000	float				see Register 30401
System Flow Minus	40002	float				see Register 30401

The user can pick off any sensor to determine its value within range:
30000-300132 -System 1 Sensors
30133-300199-Illegal
30200-30332 - System 2 Sensors
30333-30399-Illegal
30400-30418 System Params
>30419 Illegal
Ranges are shown above for the Read Input Registers

IMPORTANT NOTE
MODUS has a PDU limitation of 125 registers, so extracting the data from a 32-node system requires two transactions.

INPUT REGISTERS FOR SYSTEM VARIABLES			
DESCRIPTION	**ADDRESS**	**DATA TYPE**	**DESCRIPTION**
System Velocity Units	30400	uint16_t	1 = FPM, 2 = FPS, 3 = MPM, 4 = MPS
System Flow Units	30401	uint16_t	1 = CFM, 2 = CFH, 3 = L/S, 4 = L/M, 5 = M3H
Version	30402	uint16_t	MSB = Major, LSB = Minor
	30403	uint16_t	MSB = Patch, LSB = Build number
System Status 1	30404	uint16_t	1= ALL_OK, 2 = IN ALARM, 3 = IN FAULT, 4 = OOS
System Node Total 1	30405	uint16_t	1 - 32 NODES ALLOWED
Duct Shape 1	30406	uint16_t	1 = Rect, 2 = Round
Design Flow Max 1 Setting	30407	float	Max Flow to scale Analog Outputs
Duct Area 1	30408	float	Duct area size in ft^2 or m^2
System Status 2	30409	uint16_t	1= ALL_OK, 2 = IN ALARM, 3 = IN FAULT, 4 = OOS
System Node Total 2	30410	uint16_t	1 - 32 NODES ALLOWED
Duct Shape 2	30411	uint16_t	1 = Rect, 2 = Round
Design Flow Max 2 Setting	30412	float	Max Flow to scale Analog Outputs
Duct Area 2	30413	float	Duct area size in ft^2 or m^2
DISCREET INPUTS FOR SYSTEM VARIABLES			
DESCRIPTION	**ADDRESS**	**DATA TYPE**	**DESCRIPTION**
Sensor Enabled	10000	boolean	Bit0-Bit15 Sensor Enabled
Sensor Enabled	10001	boolean	Bit16-Bit31 Sensor Enabled
System Units	10002	boolean	Coil 1: 1 = SI, Bit 0 : 0 = US
System Conditions	10002	boolean	Coil 2: 1 = Std, Bit 0 : 0 = Actual
Rules for Discrete Inputs (2x) Up to 32 Registers can be requested from 20000 addresses or 20002 addresses. Any other address returns “Illegal Address” No more than 32 registers can be requested. Anymore than 32 will return “Illegal Address” System Conditions has a maximum of (2) registers from the base address 20004			
COILS FOR SYSTEM VARIABLES			
DESCRIPTION	**ADDRESS**	**DATA TYPE**	**DESCRIPTION**
K-factor 1	00001	boolean	1 = ON, 0 = OFF
K-factor 2	00002	boolean	1 = ON, 0 = OFF
System Reset	00003	boolean	1 = RESET
K-factor 1	00004	boolean	Returns the state of the K-factor
K-factor 2	00005	boolean	Returns the state of the K-factor
DESCRIPTION	**ADDRESS**	**DATA TYPE**	**DESCRIPTION**
report slave ID	17	ASCII	Returns string "ELECTRA-flo G5"

3.5 FIELD CHARACTERIZATION

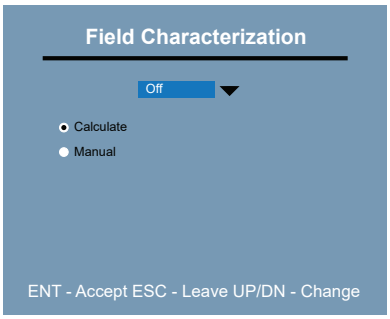

Field Characterization

Field Characterization (K-factoring) of a flow element is the adjustment of the flow measurement system to match a known reference measurement (for our reference - most commonly airflow traverse testing). Field Characterization is typically done when there is insufficient straight duct run or another issue that creates questionable output from the installed measurement system.

A Field Characterization can be developed from one, two or three referenced flow rates – more could be used, but are not necessary. One traverse test is required for each flow rate. It is recommended that a minimum of a low and a high flow rate are used to determine a Field Characterization. If there is little to no variance in the normal flow rate, it is feasible to use a Field Characterization developed from a single flow rate test. If a high and low flow rate test are performed and it is found that these readings are substantially different, then a medium flow rate should be considered to ensure a more accurate Field Characterization. For any questions or concerns regarding Field Characterization implementation, please contact Air Monitor.

Field Characterization: On enables the Field Characterization and the selection of **Calculate** or **Manual**. The **Calculate** selection will display the on-board calculator that will determine the K-factor (device and reference data must be in-hand and ready to input). **Manual** displays the Exponent and Gain value forms for inputting externally determined Exponent and Gain values.

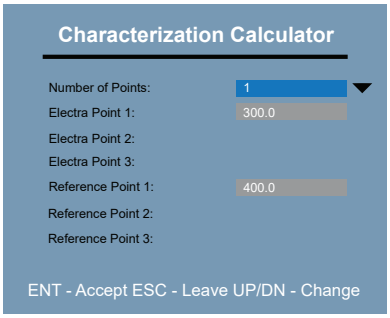

Calculate

Number of Points is the number of flow reference points.

Each point is one reference flow rate (determined by traverse testing or other) and the associated ELECTRA-flo system flow rate. The traverse testing flow rate for these reference points is performed before entering this screen and is written down with the associated ELECTRA-flo point (flow rate). For most applications, a minimum of two points (low and high flow rates) are recommended for an accurate Field Characterization. Three points may be required when a large correction is necessary.

Electra Point 1 and Reference Point 1 will be the flow rates for the first test, Points 2 for the second test and Points 3 for the third test. Best practice will be to go from the lowest to highest flow rates when inputting this data. Once all data has been entered and the **ENT** button is pushed for the final Reference Point, the calculator will display the calculated gain and exponent values.

IMPORTANT NOTE
Whenever a system is being retested in order to determine a new Field Characterization (K-factor), the existing Field Characterization should be turned off prior to testing.

Manual

Selecting Manual will allow inputting of externally determined Gain (K) and Exponent (E) values, where:

Flow (corrected) = K x Flow (uncorrected) ^ E

IMPORTANT NOTE
A Gain (K) only Field Characterization (K-factor) can be achieved with an exponent (E) value = 1.0.

3.6 SERVICE MENU

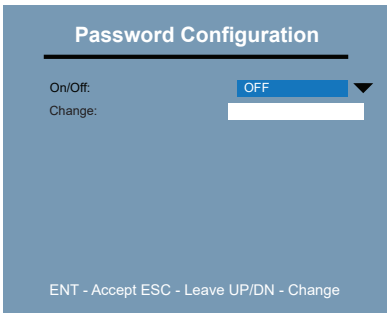

Password Configuration
This menu page is used to enable or disable the security password. The password can be up to 8 digits. Alpha and numeric characters are supported. Entering a new password will overwrite the old entry.

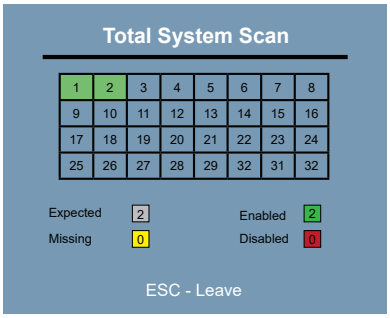

Total System Scan
Displays the current status of all of the system sensors, thus allowing the user to quickly verify all is operating properly.

Expected (white) and **Enabled** (green) sensor values should be the same unless sensors have been intentionally **Disabled** (red). See below for sensor control. If **Missing** (yellow) is at a value other than zero, the transmitter is not communicating with the associated node.

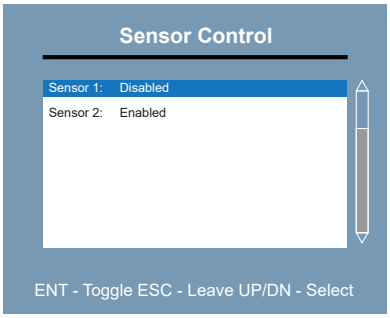

Sensor Enable/Disable
An enabled sensor will report measurement data to the ELECTRA-flo G5 transmitter. This is the default condition after initially powering the system. A disabled sensor will not report measurement data to the ELECTRA-flo G5 transmitter. Disabled sensors may have a malfunction that causes this condition. It may also be desirable to intentionally disable a sensor for troubleshooting purposes. A known bad or suspect sensor can be disabled to remove it from the flow and temperature averages until it can be evaluated and/or repaired if necessary.

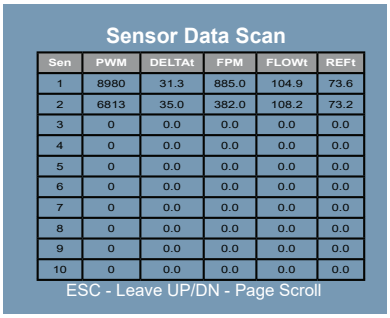

Sen	PWM	DELTAt	FPM	FLOWt	REFt
1	8980	31.3	885.0	104.9	73.6
2	6813	35.0	382.0	108.2	73.2
3	0	0.0	0.0	0.0	0.0
4	0	0.0	0.0	0.0	0.0
5	0	0.0	0.0	0.0	0.0
6	0	0.0	0.0	0.0	0.0
7	0	0.0	0.0	0.0	0.0
8	0	0.0	0.0	0.0	0.0
9	0	0.0	0.0	0.0	0.0
10	0	0.0	0.0	0.0	0.0

Sensor Data Scan
Displays sensor number (**Sen**), power input to sensors (**PWM**), temperature difference between flow and temperature sensors (**DELTAt**), velocity (**FPM**), flow temperature sensor (**FLOWt**) and the reference temperature sensor (**REFt**). This data display screen can be used to further evaluate and troubleshoot the system performance and the application characteristics; e.g., the individual sensor velocities and temperatures will provide comprehensive data regarding the flow profile measured.

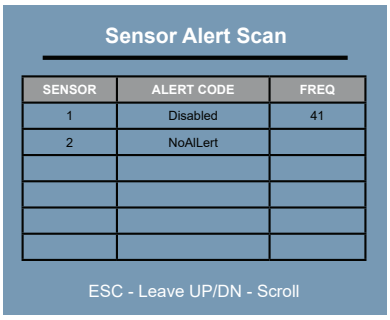

Sensor Alert Scan
Displays alert codes for expected sensors. Sensors operating properly will display **NoAlert**.

See Alert Code Table on next page.

3.6 SERVICE MENU (CONTINUED)

ALERT CODE	MAIN DISPLAY STATUS BAR TEXT	DESCRIPTION	CORRECTIVE ACTION
Missing	MISSING	Transmitter cannot communicate with Sensor	Power cycle system and recheck. Verify connection of the probes and ensure configuration has correct number of sensors.
Disabled	DISABLED	G5 is communicating with SmartProbe, but SmartProbe has heating element turned off because it recently powered on (power interruption), or due to an internal fault.	Power cycle system and recheck.
TempOOR	SENSOR TEMP OOR	Temperature measurement out of range (-20 to 140°F).	Verify application temperature is not outside -20 to 140°F. If ELECTRA-flo G5 appears to be reporting incorrectly, contact Air Monitor.
VelOOR	SENSOR VEL OOR	Average velocity exceeds 5000 FPM for ducted and 10,000 FPM for Fan Inlet	Verify factory set-up information is correct. If application velocity exceeds 5000 FPM, contact Air Monitor.
SensAOOR/ SensBOOR	SENSOR OOR	Sensor A or B fault, thermistor resistance is outside range.	Replace sensor. Contact Air Monitor.
DeltaOOR	SENSOR DELTA T OOR	Sensor Delta Temperature out of range	Contact Air Monitor.
User Disabled	USER DISABLED	User disabled sensor via GUI. Will not activate relay or alarm for disabled sensor.	Enable sensor that was disabled in the GUI.

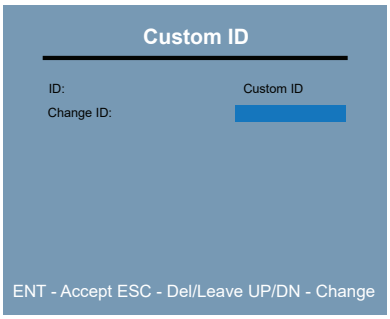

Custom ID
This menu page is used to input an alpha-numeric entry of up to 20 characters. This entry is visible on the bottom of the main display screen and is displayed in the Device Name field in the BACnet device object.

When entering multiple names, place a # delimiter between the names.

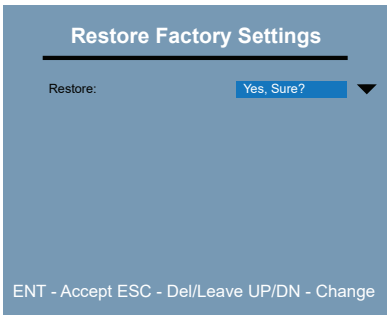

Restore Factory Settings
This menu page function restores the transmitter to the factory default settings.

IMPORTANT NOTE
This function will erase all calibration data. DO NOT use this without first consulting with Air Monitor service personnel.

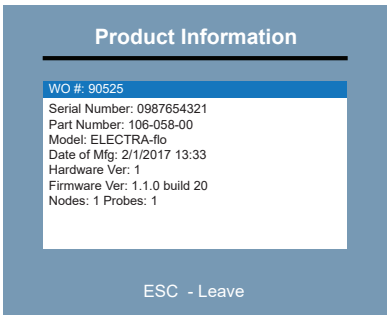

Product Information
This menu page provides information about the ELECTRA-flo transmitter hardware and firmware. It also includes information on the number of probes and nodes connected to the transmitter.

3.6 SERVICE MENU (CONTINUED)

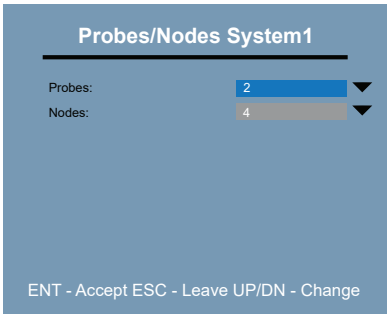

Configure Probes vs. Nodes
This menu page is used to configure the transmitter for number of probe arrays and sensors per probe. The allowable range is from 1 – 32 with a maximum total of 32 nodes.

SECTION 4.0 MAINTENANCE, INSPECTIONS, TROUBLESHOOTING

4.1 MAINTENANCE/ INSPECTIONS

The ELECTRA-flo 5 Series Thermal Airflow Measurement System has been designed to operate in most HVAC applications without the need for periodic maintenance or calibration. In some applications, it may be necessary to perform a visual inspection of the probe and sensors, and if necessary clean them using a soft, small brush and/or compressed air to remove any accumulated particulates or debris.

4.2 TROUBLESHOOTING

The ELECTRA-flo 5 Series Thermal Airflow Measurement System is intended to provide long-term, trouble-free operation. In the event there is an issue with the ELECTRA-flo measurement system, or valid airflow and/or temperature signals are not being received by the BMS/BAS or controller, check and complete the following:

1. The power wiring is securely connected to the proper terminals and is providing the intended 24V AC/DC power.
2. The signal wiring is securely connected to the proper terminals.
3. The probe-to-probe and probe-to-transmitter cables and connections are properly connected and secure.
4. Power cycle the transmitter.

If, after following the above troubleshooting steps, the ELECTRA-flo 5 Series system continues to operate improperly, contact Air Monitor for technical assistance.

APPENDIX - A

INSPECTION & HANDLING

The ELECTRA-flo/S5 Probe Arrays or Stations should be carefully inspected for damage prior to installation. In the event of a damaged item, please contact the Customer Service Department. Almost any means of handling can be utilized depending on the length of the probes or weight of the stations, however, it is important not to drop or mishandle such that damage is done to the probes, sensors, or flanges.

LOCATION OF PROBE ARRAYS & STATIONS

When installing the ELECTRA-flo/S5 Probe Arrays or Stations, select a location that meets or exceeds the **Minimum Installation Requirements**.

When more than the combined upstream and downstream minimum requirements for undisturbed straight duct is available, distribute the excess duct length in proportion to the minimum requirements.

Avoid locating the probes or stations where they will be exposed to condensing moisture, such as downstream of a coil or humidifier.

Locating the probes or stations too close to upstream sources of thermal influence (heaters, coolers) may cause a short delay on the transmitter display due to the step change in temperature.

Contact Air Monitor's Applications Engineering Department for guidance when the intended installation location does not meet the **Minimum Installation Requirements**.

MINIMUM INSTALLATION REQUIREMENTS

Considerations when installing ELECTRA-flo/S5 Probe Arrays or Stations are as follows:

Turbulent Airflow. The aerodynamic design of the ELECTRA-flo/S5 sensor aperture will permit accurate flow measurement in the presence of moderate air turbulence. The distances from air turbulence producing fittings, transitions, etc., shown in Figures 1 through 4 are required to assure accurate airflow measurement.

Stratified Airflow. The ELECTRA-flo/S5 Probe Array or Station should be mounted so that the probes cross any stratified airflow - not parallel to stratification. This mounting arrangement will permit the probe to sense the wide range of velocities present in stratified airflow.

Airborne Contaminants. The levels of air filtration and cleanliness associated with commercial HVAC systems are satisfactory for the ELECTRA-flo/S5 Probe Array or Station. Applications containing airborne contaminants or condensing moisture may impair measurement accuracy and functionality.

Minimum Requirements. The ELECTRA-flo/S5 Probe Array or Station locations shown are the minimum clearances required from air turbulence producing sources. Wherever possible, the ELECTRA-flo/S5 Probe Array or Station should be installed where greater runs of straight duct or clearances exist.

MINIMUM INSTALLATION REQUIREMENTS VARY DEPENDING ON SENSOR DENSITY

There are 4 different Minimum Installation Requirements, depending on the product and sensor density selected. These are Level 0, 1, 2, or 3. Care should taken to reference the correct one for your equipment.

PRODUCT	REFER TO
ELECTRA-flo/S5 Probe Array, Level 0	Figure 1
ELECTRA-flo/S5 Probe Array, Level 1	Figure 2
ELECTRA-flo/S5 Probe Array, Level 2	Figure 3
ELECTRA-flo/S5 Probe Array, Level 3	Figure 4
ELECTRA-flo/S5-MM Station, Level 0	Figure 1
ELECTRA-flo/S5-MM Station, Level 1	Figure 2
ELECTRA-flo/S5-MM Station, Level 2	Figure 3
ELECTRA-flo/S5-MM Station, Level 3	Figure 4
ELECTRA-flo/S5-CM Station, Level 0	Figure 1
ELECTRA-flo/S5-CM Station, Level 2	Figure 2
ELECTRA-flo/S5-CM Station, Level 3	Figure 3

To determine the equivalent duct diameter dimension for **Level 0** rectangular ducts, use the following Simple Equivalent Diameter equation:

Simple Equivalent Diameter X

Rectangular Duct: X = (Width + Height) / 2

Circular Duct: X = Duct Diameter

To determine the equivalent duct diameter dimension for **Level 1, 2, or 3** rectangular ducts, use the following Simple Equivalent Diameter equation:

$$\text{Rectangular Duct: } X = \frac{2(H \times W)}{H+W}$$

Circular Duct: X = Duct Diameter

Note:

In all cases the X distances are to the leading (or trailing) edge for STATIONS (shown), or to the center line of PROBES.

MINIMUM INSTALLATION REQUIREMENTS VARY DEPENDING ON SENSOR DENSITY (CONTINUED)

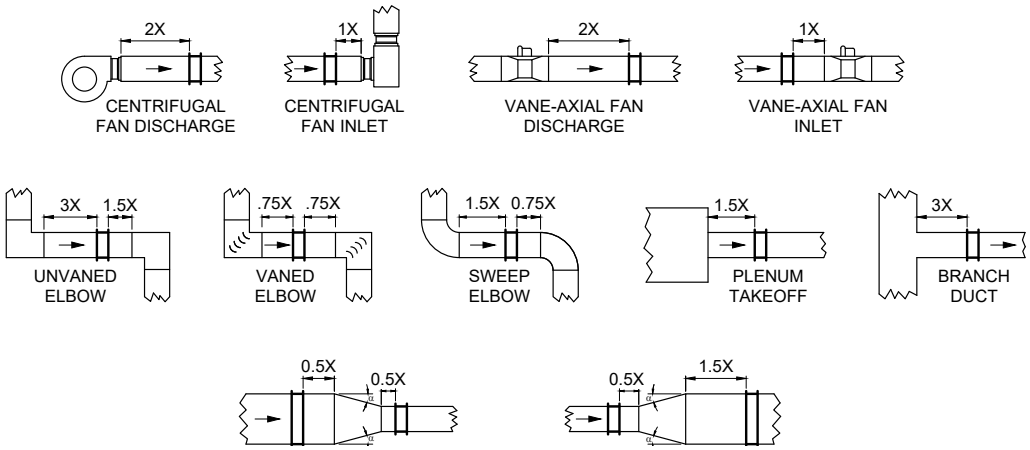

Figure 1

ELECTRA-Flo/S5 Probe Array (Level 0), ELECTRA-flo/S5-MM Station (Level 0), ELECTRA-flo/S5-CM Station (Level 0)

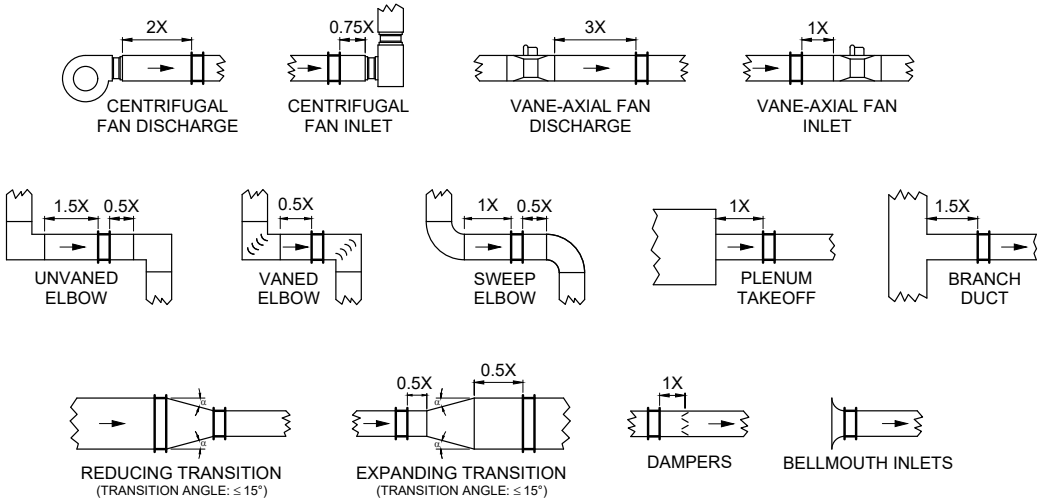

Figure 2

ELECTRA-Flo/S5 Probe Array (Level 1), ELECTRA-flo/S5-MM Station (Level 1), ELECTRA-flo/S5-CM Station (Level 2)

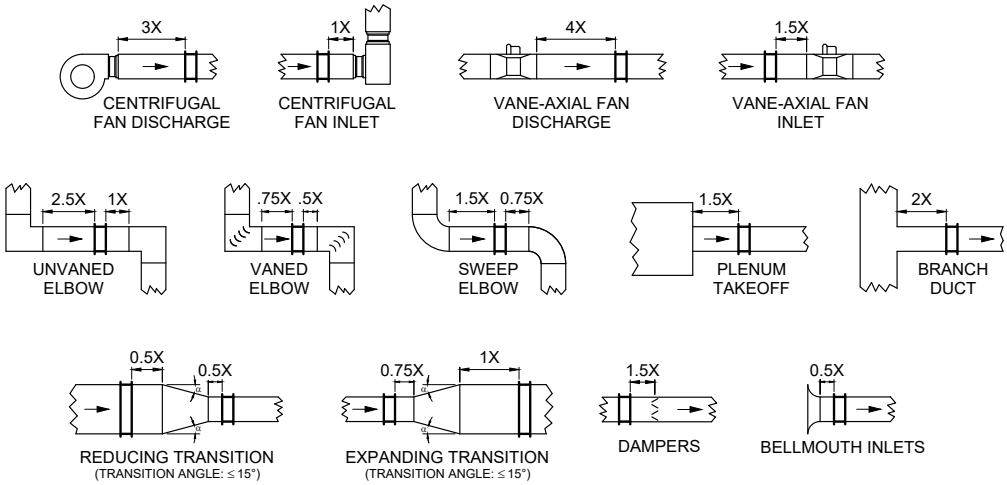

Figure 3

ELECTRA-Flo/S5 Probe Array (Level 3) & ELECTRA-flo/S5-MM Station (Level 3)

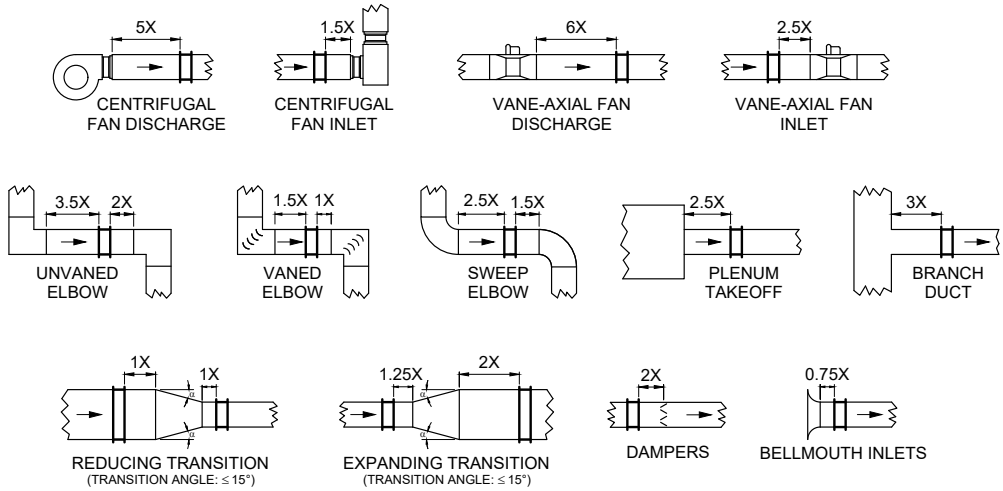

Figure 4

ELECTRA-Flo/S5 Probe Array (Level 3) & ELECTRA-flo/S5-MM Station (Level 3)

GENERAL INSTALLATION - ELECTRA-FLO/S5-MM & ELECTRA-FLO/S5-CM STATIONS

The station may have been ordered with the transmitter mounted at the Factory. If not, the stations and transmitter that go together for a particular measurement location can be identified by means of the **ESID #** on the end of each station, the transmitter package, and the transmitter itself.

Each station has an airflow arrow on the probe mounting plates to assist in correct installation relative to the direction of airflow in the duct.

If the station was ordered WITHOUT the transmitter mounted to the station, the cable connecting the station to the transmitter will be attached to the station. This has a standard length of 10', but may have been ordered with an optional 25', 50' or 100' long cable.

GENERAL INSTALLATION - ELECTRA-FLO/S5 PROBE ARRAY

All probes for an array are packaged together when shipped from the Factory. The probes and the transmitter for a particular measurement location can be identified by means of the ESID # on the end of each probe, transmitter package, and the transmitter itself.

IMPORTANT NOTE
The ESID # on the Transmitter and on the Probe(s) must match. DO NOT MIX AND MATCH
Confirm the number of Probes needed for each Transmitter by referring to the provided Factory Set-Up Sheet.

Each probe has an airflow arrow on the mounting plate to assist in correct installation relative to the direction of airflow in the duct.

For rectangular ducts, the standard arrangement is for the probe(s) to be mounted on the short side (usually the height) of the duct, with the probe(s) running parallel to the long dimension (usually the width) of the duct. Refer to Figure 6 to determine probe spacing.

For circular ducts with more than one probe, the probes must be staggered along the axis of the duct to provide clearance as they cross over each other in the center. See Figure 4.

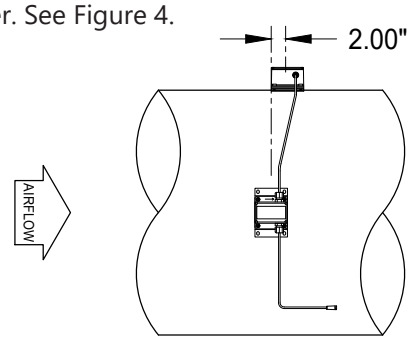

Figure 4

GENERAL INSTALLATION - ELECTRA-flo/S5 PROBE ARRAY (CONTINUED)

Depending upon the diameter of a round duct the quantity of probes per array will range between one and four. Based upon the quantity of probes in a particular array, see Figure 5 to determine proper probe spacing. Probes mounted in circular duct with a diameter "D" have a radial spacing "R" on the outside surface of the duct.

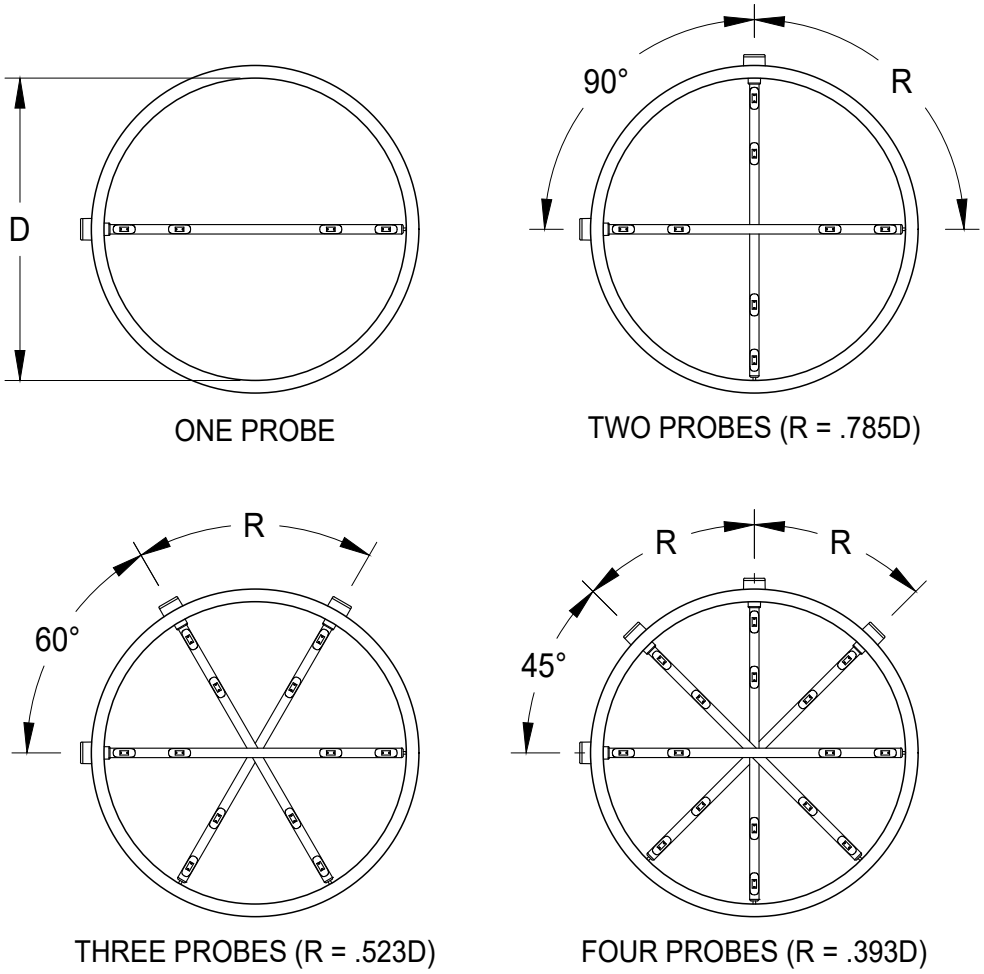

Figure 5

GENERAL INSTALLATION - ELECTRA-flo/S5 PROBE ARRAY (CONTINUED)

ELECTRA-flo/S5 Probe Arrays for rectangular ducts are based on equal area spacing. See Figure 6 for examples.

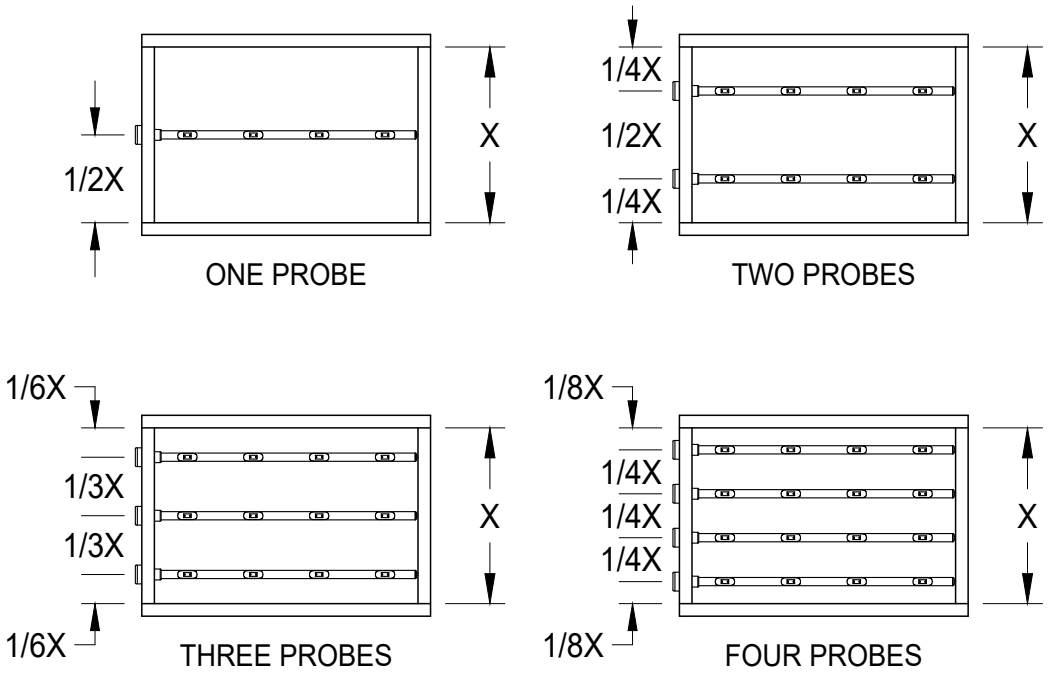

Figure 6

CAUTION
Do not attempt to install ELECTRA-flo/S5 probes longer than 72" with just one person.

INSTALLING ELECTRA-FLO/S5 PROBE ARRAYS 96" OR MORE IN LENGTH

ELECTRA-flo/S5 Probe Arrays having probe lengths between 96" and 144" are provided with a probe center support assembly to structurally support against the effects of gravity, vibration, and the force of the moving airflow.

All ELECTRA-flo/S5 Probe Arrays must be handled carefully during installation to avoid damaging any of the thermal sensors. Due to their greater cantilevered weight, larger probes will require two people during installations; one outside the duct to insert the probe, and a second person inside the duct to support and guide the probe into its end support hole.

INSTALLING ELECTRA-flo/S5 PROBE ARRAYS 96" OR MORE IN LENGTH (CONTINUED)

After the ELECTRA-flo/S5 Probe Array is fully mounted in the duct, install the center support by connecting in to the individual probes using the U-bolt hardware provided. The center support goes on the downstream side of the ELECTRA-flo/S5 Probe Array. See Figure 7.

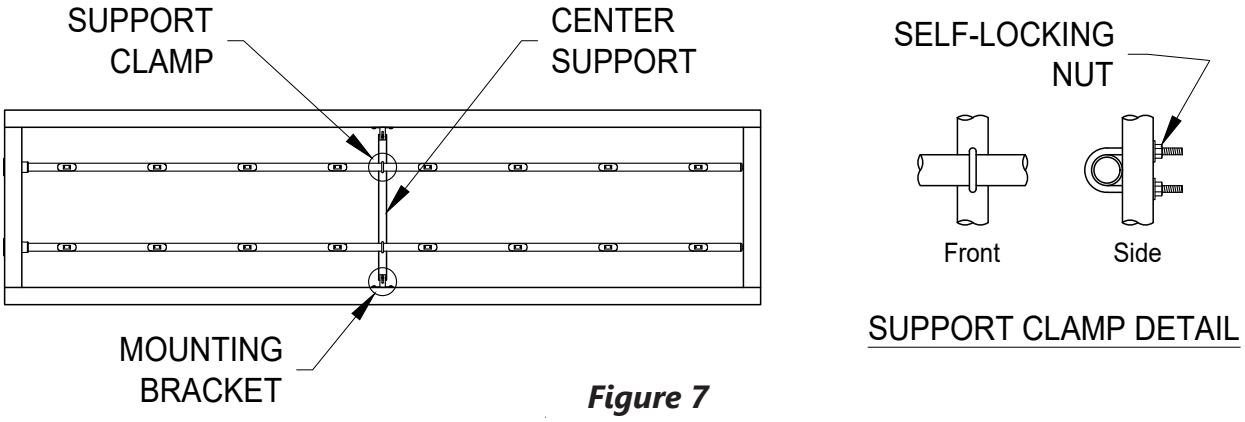

Figure 7

Finger tighten the self-locking nuts so the center support is attached to the probe(s). Slide the center support mounting brackets outward so they come in contact with the duct walls, then secure in place with the end support screws provided.

Position the center support so that the clearance between the center support and the duct wall is the same at both ends, then tighten the mounting bracket bolts. See Figure 8.

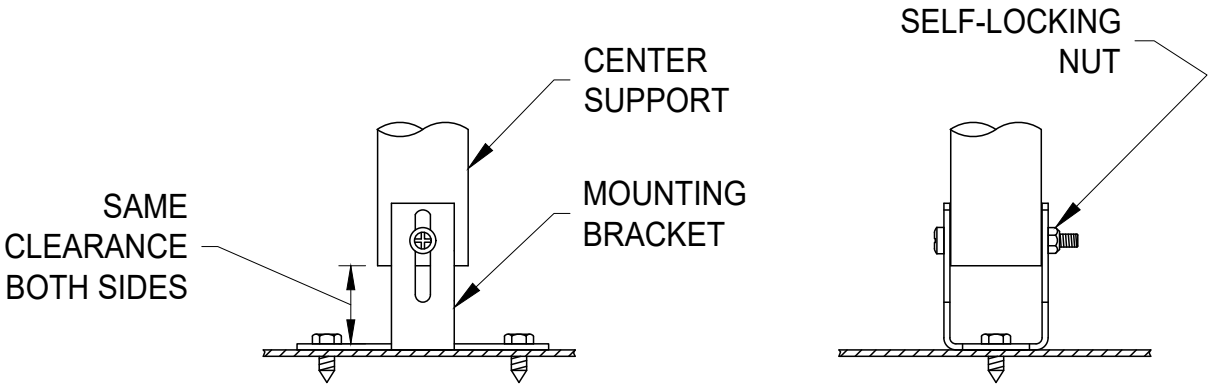

Figure 8

Finally, tighten the self-locking nuts to firmly attach the center support to the probe(s), but not so tight as to deform either the center support or the probe(s).

EXTERNALLY MOUNTED ELECTRA-FLO/S5 PROBES

Mounting requires a 1-3/4" hole on one side of the duct, and a 3/8″ hole on the opposite side for the threaded end support (for probe lengths longer than 18"). See Figure 9 for mounting details.

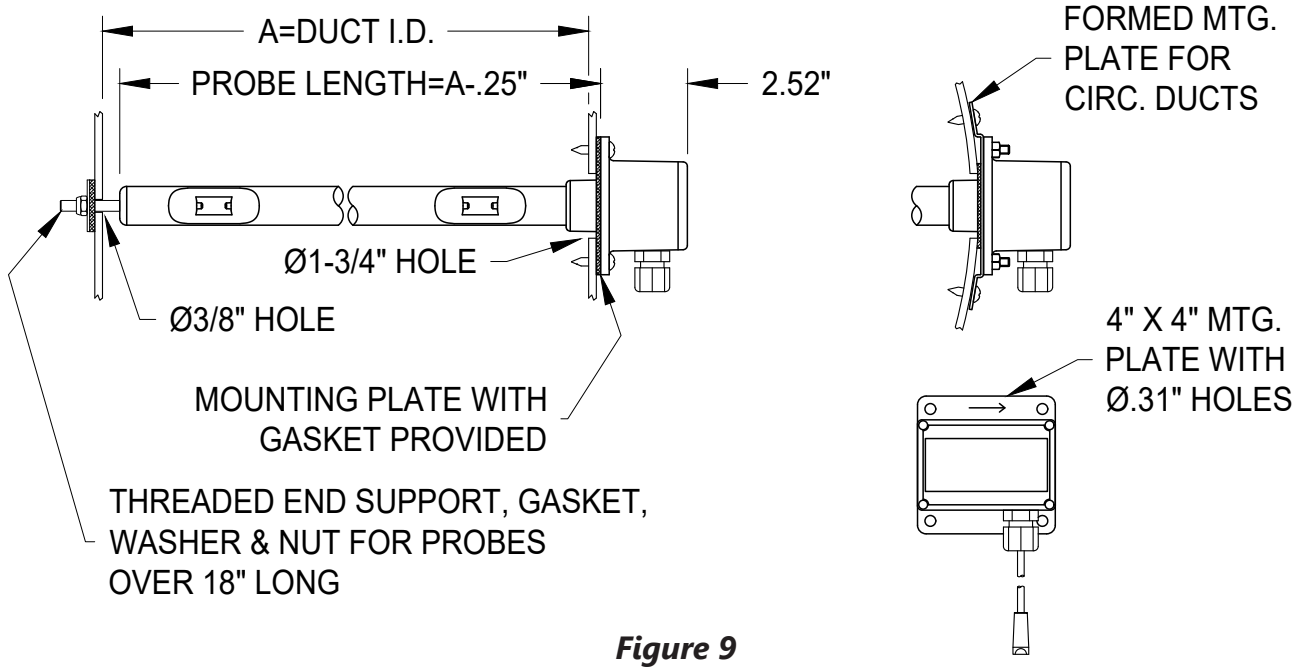

Figure 9

INTERNALLY MOUNTED ELECTRA-FLO/S5 PROBES

Mounting requires a 1.00″ diameter hole to allow the signal cable to be run to the junction box, which connects to the transmitter. See Figure 10 for mounting details.

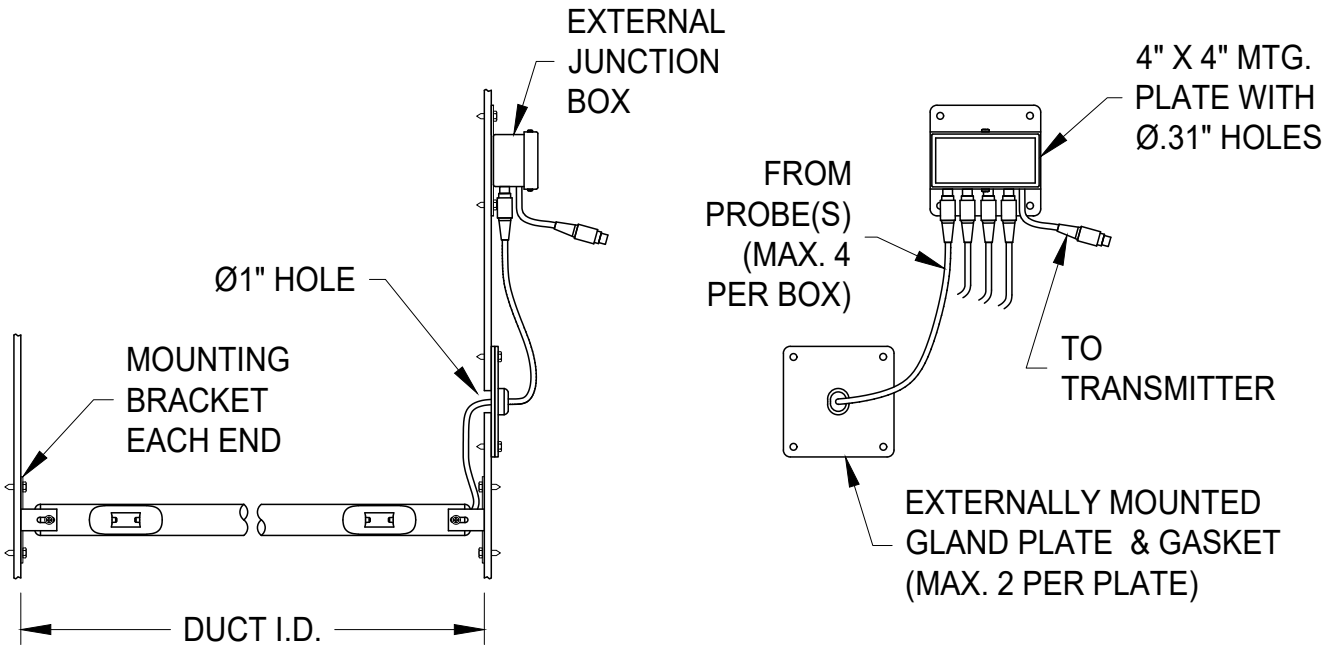

Figure 10

CABLE CONNECTIONS FOR EXTERNALLY MOUNTED ELECTRA-FLO/S5 PROBE ARRAYS WITH NEMA 1 CONFIGURATION

All probe-to-probe and probe array to transmitter cables are included.

All probes have integral plenum rated cables terminated with positive locking mini-DIN connectors.

The cable length on each probe has been factory selected based upon size of the duct and the quantity of probes. Probe-to-probe cables will range in length from 3' to 5'. The one probe that connects to the transmitter will have a standard length 10' cable, with optional 25', 50' and 100' long cables.

Multiple externally mounted probes connect to each other in a daisy chain method, with one probe in the chain connecting to the transmitter. See Figure 11.

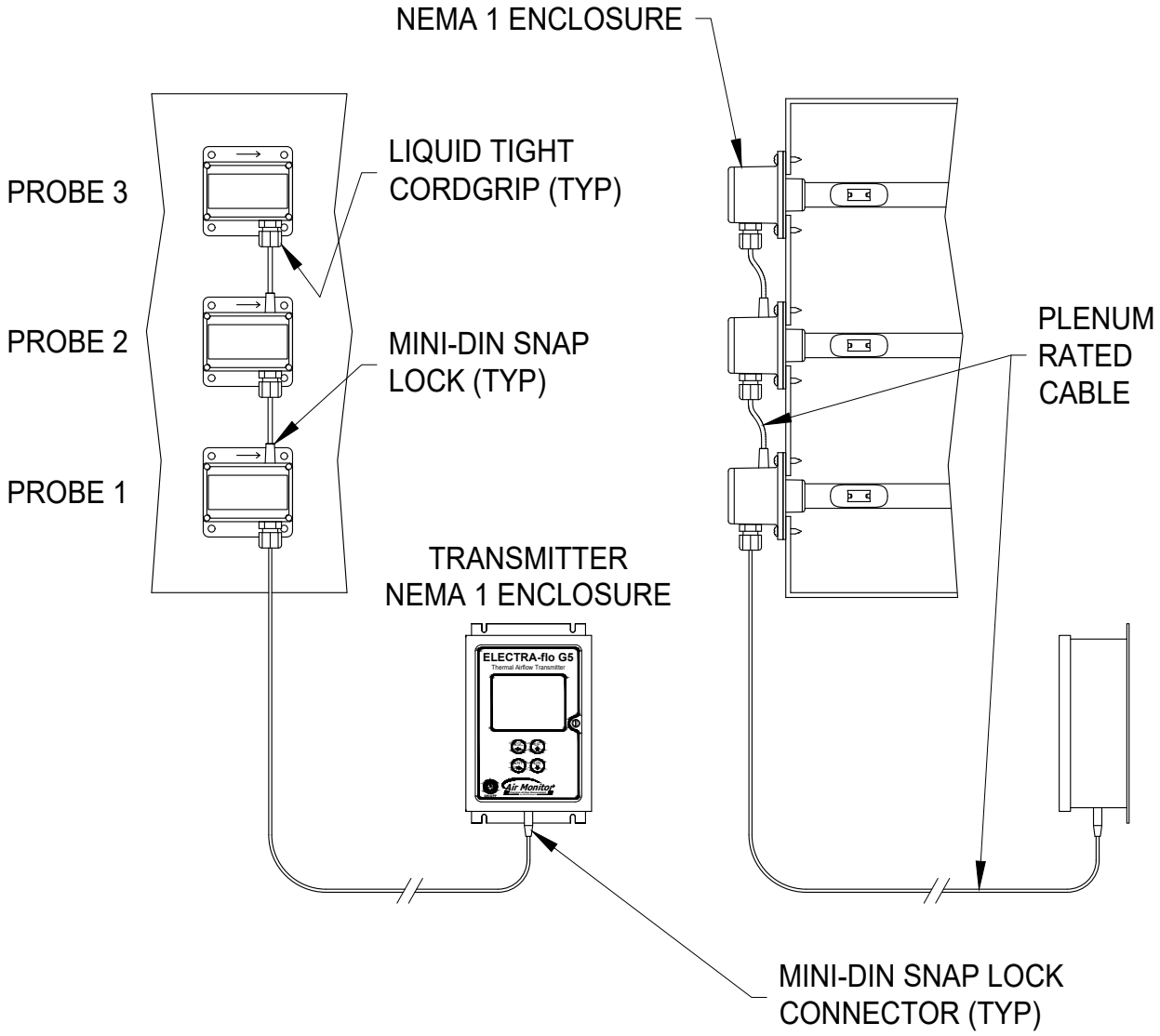

Figure 11

CABLE CONNECTIONS FOR EXTERNALLY MOUNTED ELECTRA-FLO/S5 PROBE ARRAYS WITH NEMA 4 CONFIGURATION

All probe-to-probe and probe array to transmitter cables are included.

All probes have integral plenum rated cables terminated with watertight IP68 connectors.

The cable length on each probe has been factory selected based upon size of the duct and the quantity of probes. Probe-to-probe cables will range in length from 3' to 5'. The one probe that connects to the transmitter will have a standard length 10' cable, with optional 25', 50' and 100' long cables.

Multiple externally mounted probes connect to each other in a daisy chain method, with one probe in the chain connecting to the transmitter. See Figure 12.

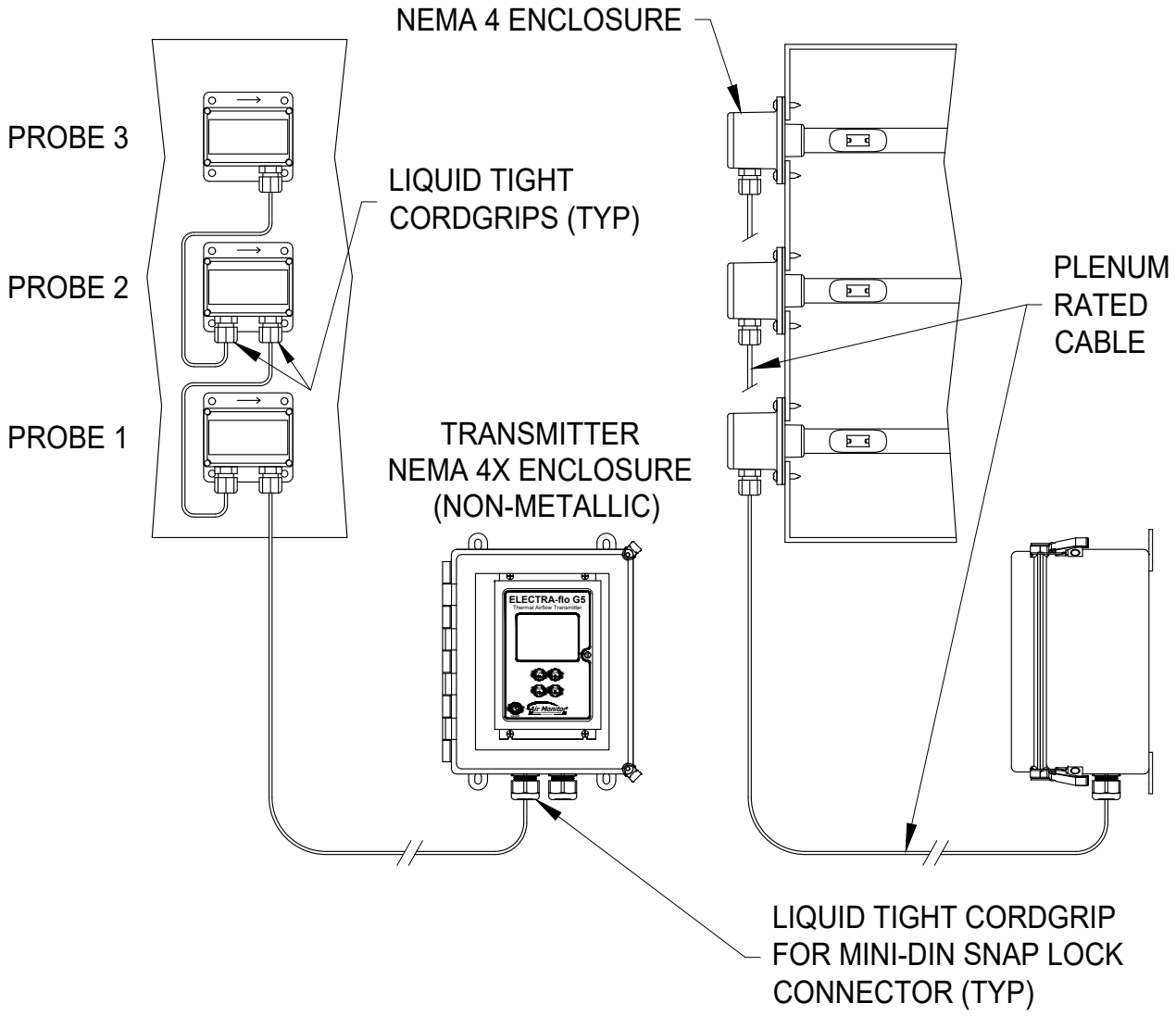

Figure 12

CABLE CONNECTIONS FOR EXTERNALLY MOUNTED ELECTRA-flo/S5 PROBE ARRAYS WITH NEMA 4 CONFIGURATION (CONTINUED)

Probe-to-probe cables require field wiring connections inside probe enclosure, see Figure 13.

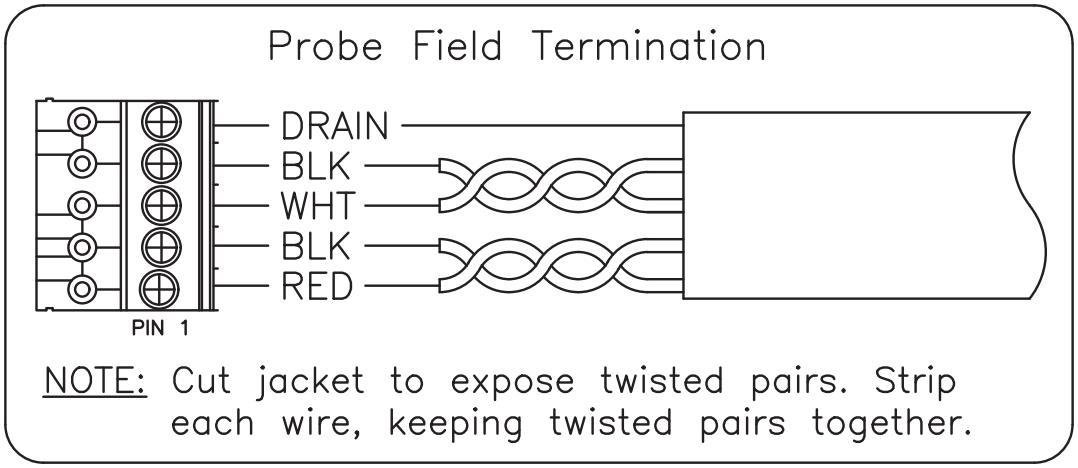

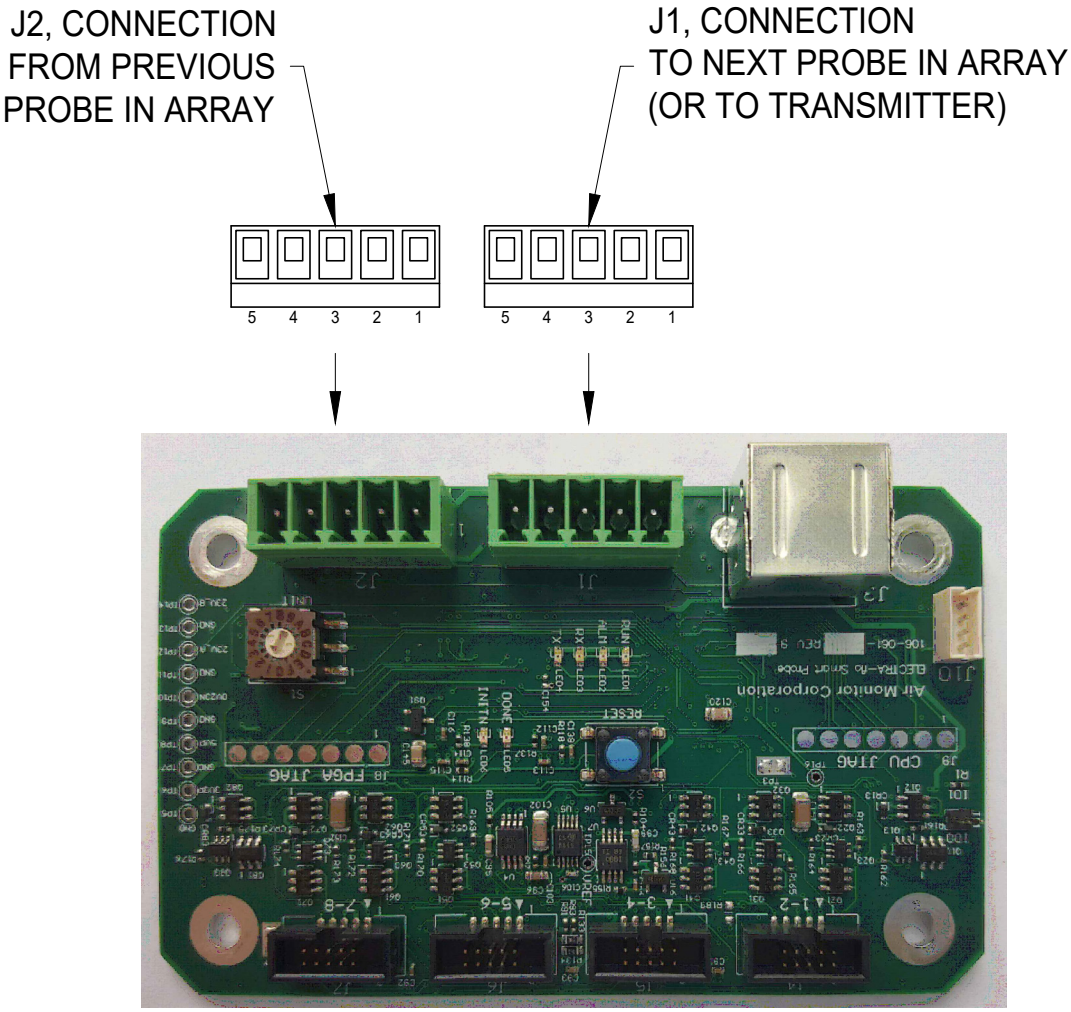

Figure 13

CABLE CONNECTIONS - INTERNALLY MOUNTED ELECTRA-FLO/S5 PROBE ARRAYS WITH NEMA 1 CONFIGURATION

All probe-to-probe and probe array to transmitter cables are included.

All probes have integral plenum rated cables terminated with positive locking mini-DIN connectors.

The cable length on each probe has been factory selected based upon size of the duct and the quantity of probes. Probe-to-probe cables will range in length from 3' to 5'. The one probe that connects to the transmitter will have a standard length 10' cable, with optional 25', 50' and 100' long cables.

Multiple internally mounted probes are connected in parallel to the externally mounted junction box, by routing the probe cables through an externally mounted gland plate. The junction box connects to the transmitter. See Figure 14.

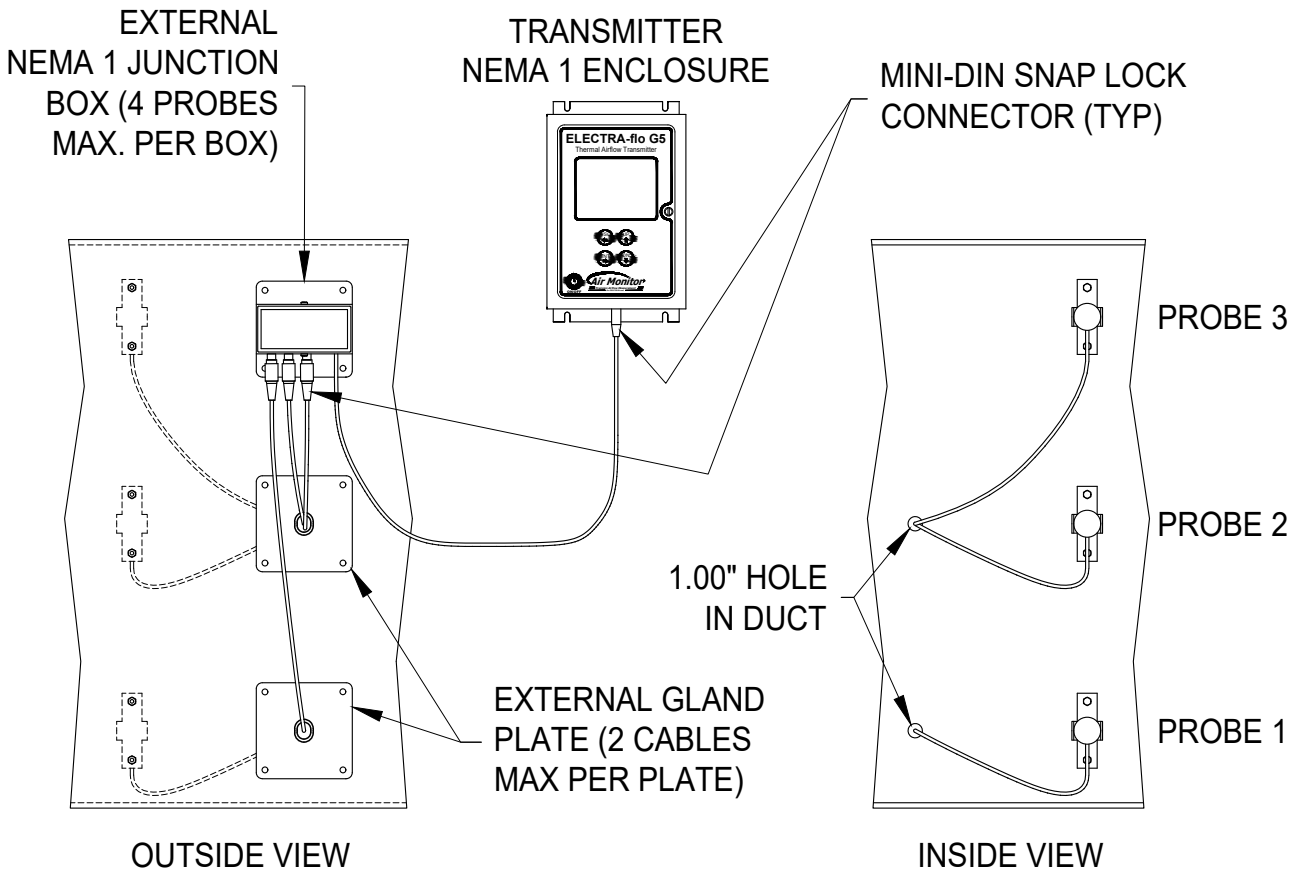

Figure 14

CABLE CONNECTIONS - INTERNALLY MOUNTED ELECTRA-FLO/S5 PROBE ARRAYS WITH NEMA 4 CONFIGURATION

All probe-to-probe and probe array to transmitter cables are included.

All probes have integral plenum rated cables terminated with positive locking mini-DIN connectors.

The cable length on each probe has been factory selected based upon size of the duct and the quantity of probes. Probe-to-probe cables will range in length from 3' to 5'. The one probe that connects to the transmitter will have a standard length 10' cable, with optional 25', 50' and 100' long cables.

Multiple internally mounted probes are connected in parallel to the externally mounted junction box, by routing the probe cables through an externally mounted gland plate. The junction box connects to the transmitter. See Figure 15.

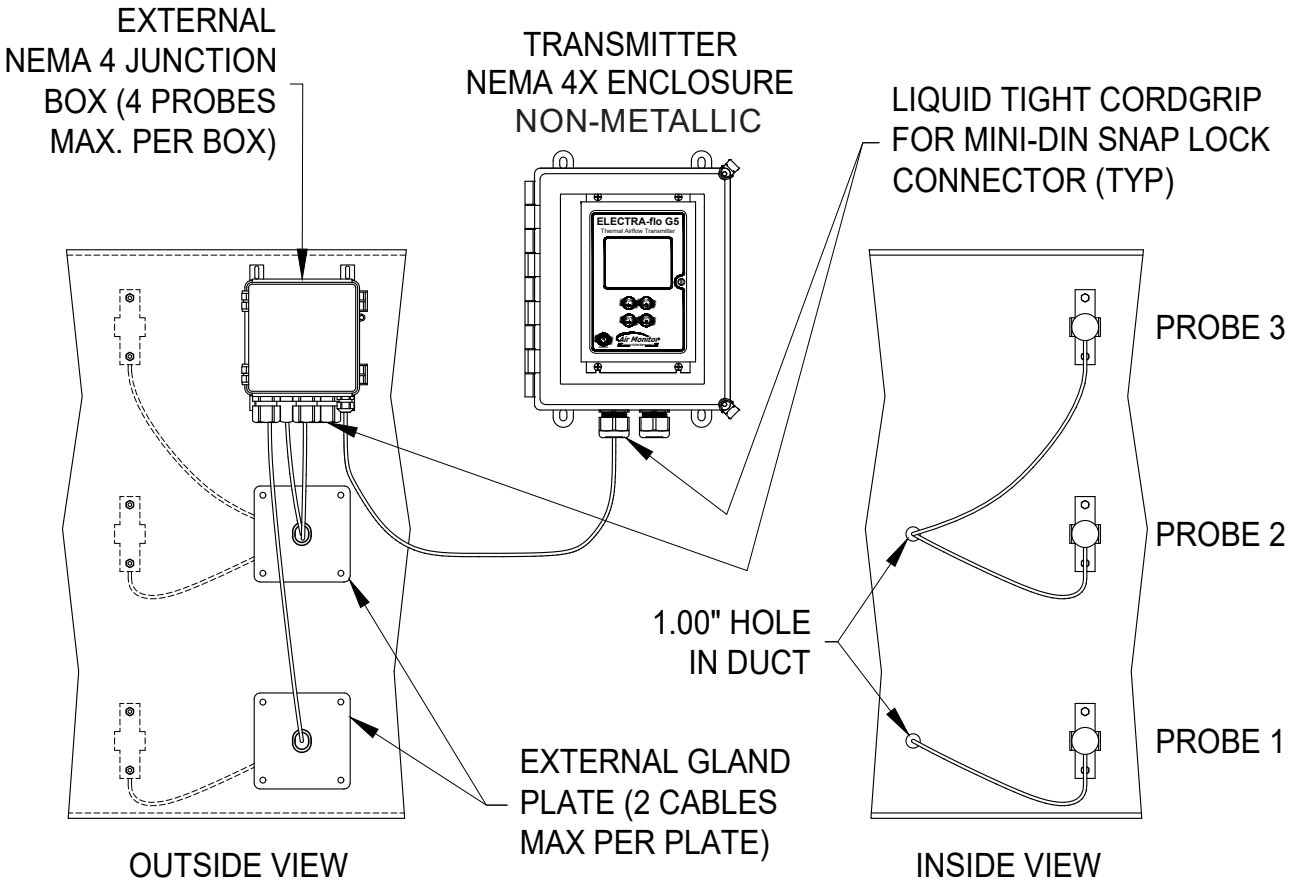

Figure 15

INSPECTION - ELECTRA-FLO G5 TRANSMITTER

Carefully remove the transmitter from the shipping container and inspect for any damage. In the event of a damaged item, please contact the Customer Service Department.

Review the Factory Set-Up Information Sheet provided separately and verify the W.O # and Serial # match those on the ELECTRA-flo G5. Verify that the configuration recorded on the Factory Set-Up Information Sheet is correct for your application. If not, contact Air Monitor's Customer Service Department for guidance.

LOCATION - ELECTRA-FLO G5 TRANSMITTER

The standard ELECTRA-flo G5 transmitter has a NEMA 1 enclosure suitable for most clean indoor locations. If additional protection is required, mount the transmitter in an enclosure with an adequate NEMA rating.

The ambient temperature of the selected mounting locations must be between -20ºF to 140ºF. Consideration should be given to units exposed to direct sunlight.

The selected mounting location should be rigid and free of vibration.

INSTALLATION - ELECTRA-FLO G5 TRANSMITTER

The transmitter must be located so that the single cable from the probe array or station will reach the receptacle in the bottom of the transmitter. Standard cable length is 10', with optional 25', 50' and 100' cables available.

Mount the transmitter to a vertical surface in an upright position.

See Figure 15 for transmitter dimensions and installation clearances.

MOUNTING - ELECTRA-FLO G5 TRANSMITTER ENCLOSURE

For NEMA 1 Aluminum Enclosure (See Figure 16): Tools Required: Electric drill, #25 (0.1495”) bit, screwdriver or nut driver, and four #8-32 self-tapping machine screws.

For NEMA 4X Non-Metallic Enclosure (See Figure 17): Tools Required: Electric drill, #16 (0.177”) bit, screwdriver or nut driver, and four #10-32 self-tapping machine screws and flat washers.

For NEMA 4X Stainless Steel Enclosure (See Figure 18): Tools uired: Electric drill, #16 (0.177”) bit, screwdriver or nut driver, and four #10-32 self-tapping machine screws and flat washers.

The ELECTRA-flo G5 can be mounted in any position provided it is secured using all four mounting holes.

Reasonable consideration should be given to clearances for electrical connections.

Once a suitable location is found, use the unit as a template to mark the centers of the four mounting holes.

Drill four pilot holes at the marked locations. With the unit in position, install the four fasteners.

MOUNTING - ELECTRA-FLO G5 TRANSMITTER IN NEMA 1 ALUMINUM ENCLOSURE

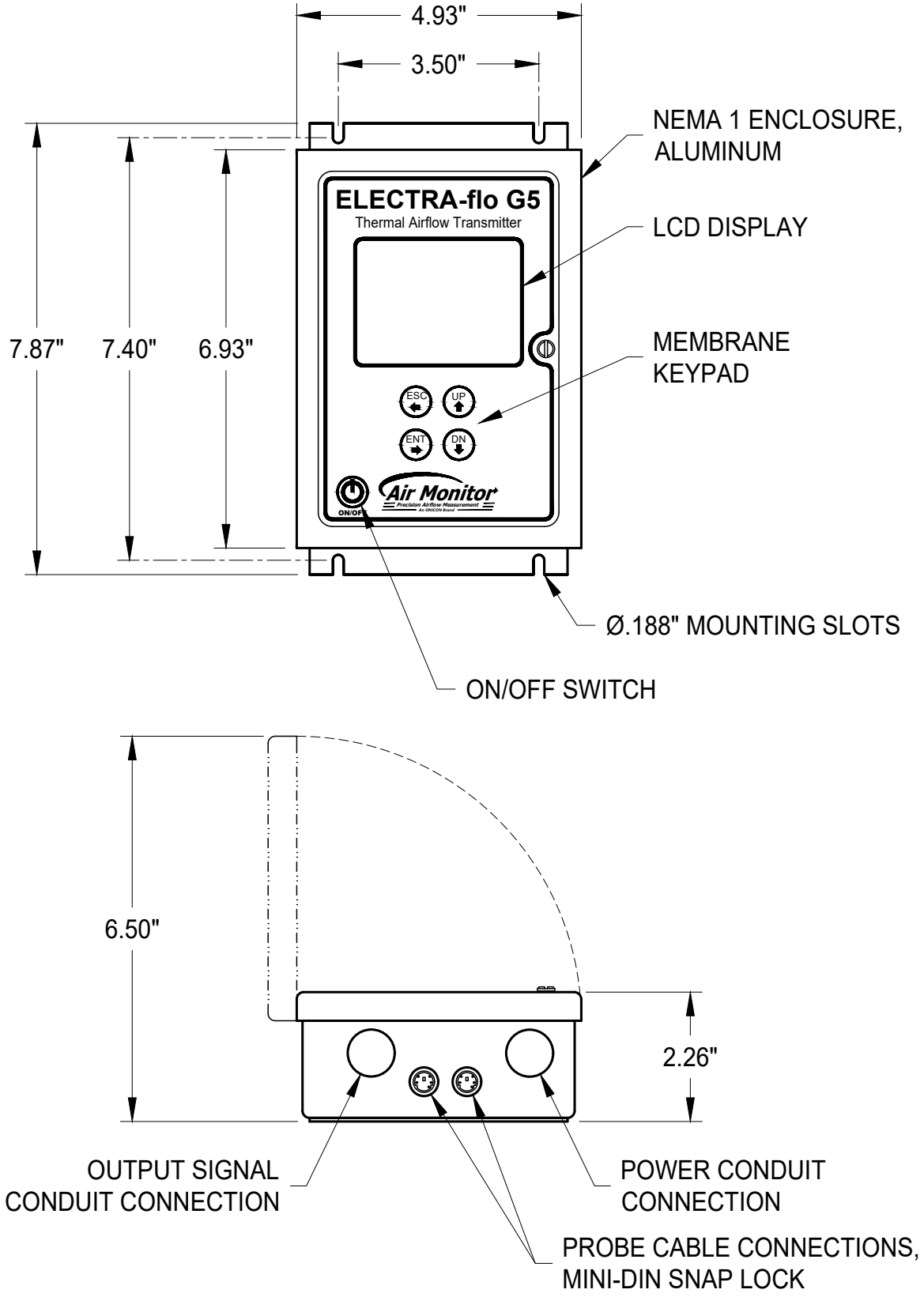

Figure 16

MOUNTING - ELECTRA-FLO G5 TRANSMITTER IN NEMA 4X NON-METALLIC ENCLOSURE

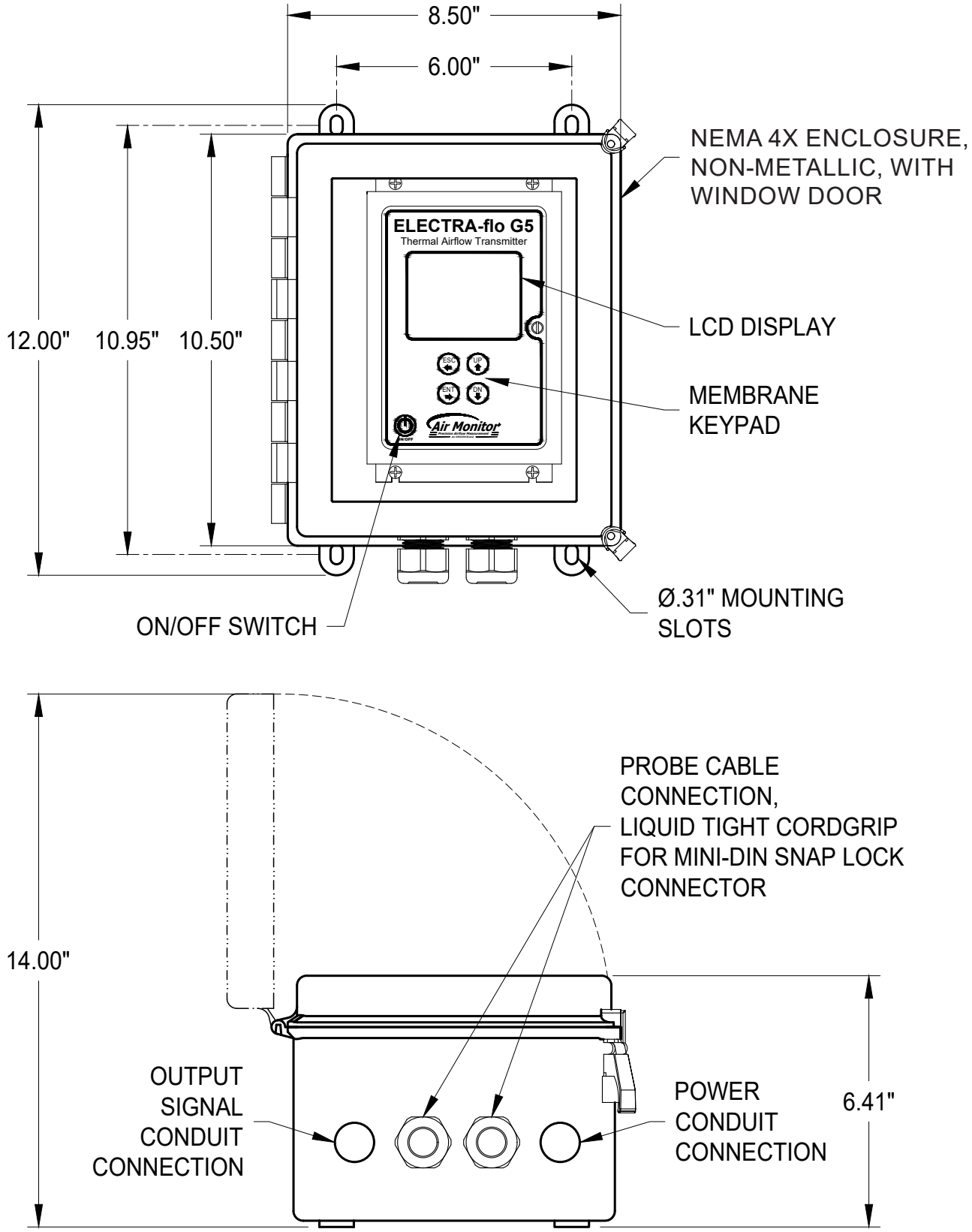

Figure 17

MOUNTING - ELECTRA-FLO G5 TRANSMITTER IN NEMA 4X STAINLESS STEEL ENCLOSURE

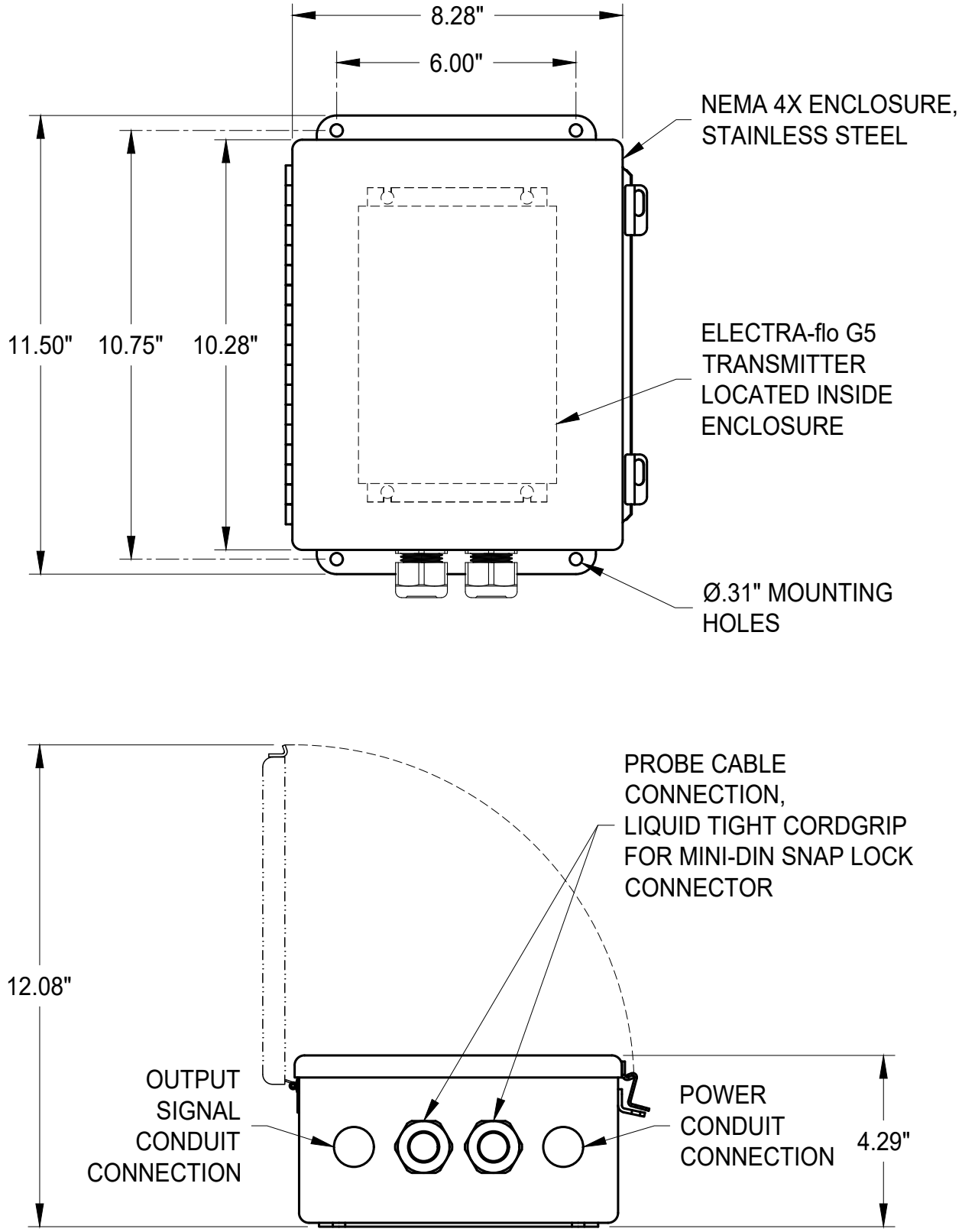

Figure 18

POWER & SIGNAL CONNECTIONS

WIRING NOTES. Two conduit openings are provided on the bottom of the transmitter enclosure for power and signal wiring. AMC recommends power wiring be 18 AWG to 14 AWG (max), and signal wiring be 22 AWG to 14 AWG (max). No more than two wires should be connected to an individual terminal. For ease in making connections, the power and signal terminals are removable by pulling the terminal strip straight up and off the circuit board.

Once the wiring has been completed, replace the terminal strip by aligning with receptacle and pressing firmly. See Figure 19 for locations of field wiring terminal strips.

POWER 24VAC/DC, Terminal Strip J4, terminals L, N, & G. Connect AC Line (or DC Positive) to terminal L. Connect AC Neutral (or DC Negative) to terminal N. Connect earth ground to terminal G. Power supply must be 20-28VAC or 20-40VDC.

ANALOG OUTPUT 1, Terminal strip J1, terminals 1 (+) & 2 (COM).

ANALOG OUTPUT 2, Terminal strip J1, terminals 3 (+) & 4 (COM).

NETWORK COMMUNICATION, Terminal strip J2, terminals 5 (D+), 6 (D-), 7 (G) & 8 (SH).

ALARM OUTPUT, Terminal strip J3, terminals 9 (NO), 10 (C) & 11 (NC).

Consult the Factory Set-Up sheet and the IOM manual for details related to configuration options and start-up.

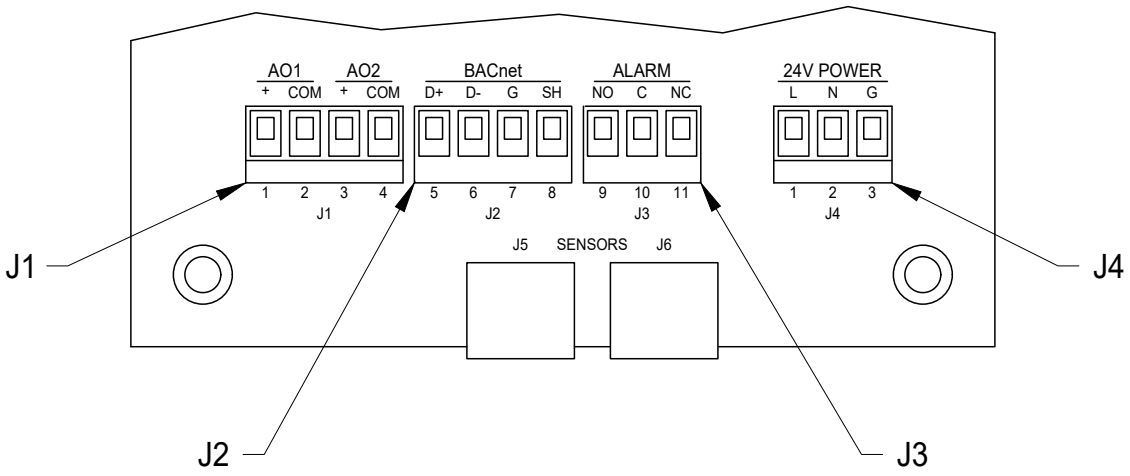

Figure 19