DPT-100

Pressure & Flow Transmitter
Installation and Operation Manual

Air Monitor
Precision Airflow Measurement
An ONICON Brand

SAFETY INFORMATION

The DPT-100 Pressure & Flow Transmitter was calibrated at the factory before shipment. To ensure correct use of the system, please read this manual thoroughly.

Regarding this Manual:

- This manual should be passed on to the end user.
- Before use, read this manual thoroughly to comprehend its contents.
- The contents of this manual may be changed without prior notice.
- All rights reserved. No part of this manual may be reproduced in any form without Air Monitor's written permission.
- Air Monitor makes no warranty of any kind with regard to this material, including, but not limited to, implied warranties of merchantability and suitability for a particular purpose.
- All reasonable effort has been made to ensure the accuracy of the contents of this manual. However, if any errors are found, please inform Air Monitor.
- Air Monitor assumes no responsibilities for this product except as stated in the warranty.
- If the customer or any third party is harmed by the use of this product, Air Monitor assumes no responsibility for any such harm owing to any defects in the product which were not predictable, or for any indirect damages.

SAFETY PRECAUTIONS:

The following general safety precautions must be observed during all phases of installation, operation, service, and repair of this product. Failure to comply with these precautions or with specific WARNINGS given elsewhere in this manual violates safety standards of design, manufacture, and intended use of the product. Air Monitor assumes no liability for the customer's failure to comply with these requirements. If this product is used in a manner not specified in this manual, the protection provided by this product may be impaired.

The following messages are used in this manual:

WARNING
Messages identified as "Warning" contain information regarding the personal safety of individuals involved in the installation, operation or service of this product.

CAUTION
Messages identified as "Caution" contain information regarding potential damage to the product or other ancillary products.

IMPORTANT NOTE
Messages identified as "Important Note" contain information critical to the proper operation of the product.

TABLE OF CONTENTS

SECTION 1.0 GENERAL INFORMATION 4
1.1 PURPOSE OF THIS MANUAL 4
1.2 TYPICAL AIRFLOW MEASUREMENT SYSTEM INSTALLATIONS 4
1.3 STANDARD FEATURES AND SPECIFICATIONS 5
1.4 MODEL NUMBERING CODIFICATION 6
1.5 CHECKING THAT YOU RECEIVED EVERYTHING 6
1.6 WORKING ENVIRONMENT 6
1.7 SERIAL NUMBER 6

SECTION 2.0 INSTALLATION 7
2.1 TRANSMITTER 7
2.1.1 Site Selection 7
2.1.2 Transmitter Dimensions 8
2.1.3 Transmitter Installation 9
2.1.4 Transmitter Wiring Connections 10
2.2 AIRFLOW SENSOR 10
2.2.1 Airflow Sensor Process Connections 10

SECTION 3.0 OPERATION 11
3.1 START-UP 11
3.2 CONFIGURATION 11
3.3 ENTERING THE DEVICE SETTINGS 11

SECTION 4.0 DEVICE SETTINGS 12
4.1 PRESSURE UNIT 12
4.2 MEASURING RANGE 12
4.3 PRESS. DESIGNATION 13
4.4 FLOW MEASUREMENT 13
4.4.1 CALC FORMULA 13
4.4.2 K-VALUE 13
4.4.3 FLOW UNIT 14
4.4.4 SCALE OUTPUT FLOW 14
4.4.5 AMBIENT PRESSURE COMPENSATION 14
4.4.6 NOISE CANCELING 15
4.4.7 CUSTOM DESIGNATION 15
4.5 ANALOG OUTPUT 1 15
4.5.1 ANALOG OUTPUT 1 15
4.5.2 SIGNAL TYPE 16
4.5.3 OUTPUT SCALING 16
4.6 NFC ENABLE 16
4.7 DISPLAY 16
4.7.1 DASHBOARD 17
4.7.2 VALUE 1 17
4.7.3 VALUE 2 17
4.8 ALERT FUNCTION 17
4.9 RESPONSE TIME 19
4.10 AUTO ZERO 19
4.10.1 AUTOZERO INTERVAL 19
4.11 GENERAL SETTINGS 19
4.11.1 DEVICE RESET 20
4.11.2 PASSWORD 20
4.11.3 PASSWORD ENABLE 20
4.11.4 BACKGROUND COLOR 20
4.11.5 FONT COLOR 21
4.11.6 CONFIRMATION MENU 21

SECTION 5.0 MAINTENANCE 22

SECTION 6.0 TROUBLESHOOTING 22

SECTION 1.0 GENERAL INFORMATION

Thank you for purchasing the DPT-100 Pressure & Flow Transmitter. As our valued customer, Air Monitor's commitment to you is to provide quality service and support while continuing to offer you accurate, reliable products to meet your flow measurement needs.

1.1 PURPOSE OF THIS MANUAL

This manual provides information regarding the installation, operation and maintenance of your differential pressure and flow transmitter. This is not an electrical or HVAC trade manual. This manual is the basic reference tool for the DPT-100 Pressure & Flow Transmitter, including its main power connection and associated signal inputs and outputs. The complete system consists of the transmitter and associated airflow sensors. Please refer to supplemental documents for additional information.

1.2 TYPICAL AIRFLOW MEASUREMENT SYSTEM INSTALLATIONS

Air Monitor's DPT-100 Pressure & Flow Transmitter accurately measures the differential pressure created by airflow entering and moving through an air flow probe.

The DPT-100 Pressure & Flow Transmitter can be used with most fans found on air handlers and built-up systems.

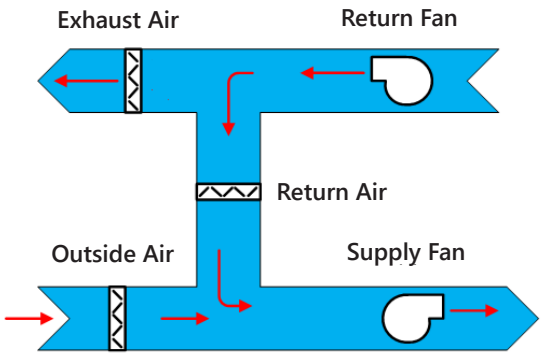

Supply and Return Fan Measurement
DPT-100 per each fan installation location in a variety of configurations, primarily used for supply and return air flow. Differential pressure can be measured via piezo ring or paired with VOLU-probe/FI probes to determine airflow.

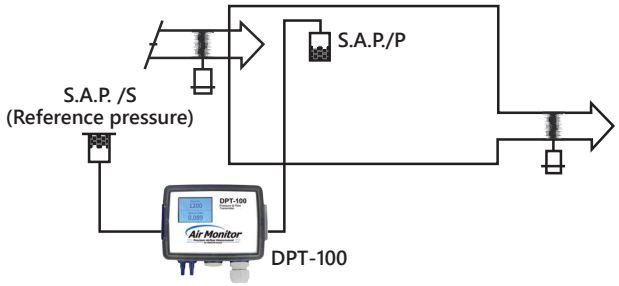

POSITIVE OR NEGATIVE SPACE PRESSURIZATION

1.2 TYPICAL AIRFLOW MEASUREMENT SYSTEM INSTALLATIONS (CONTINUED)

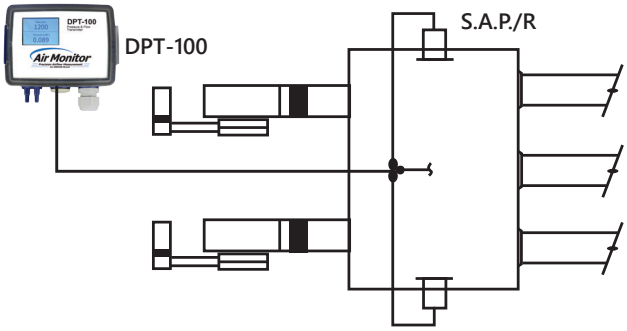

FAN DISCHARGE PLENUM PRESSURE

1.3 STANDARD FEATURES AND SPECIFICATIONS

DPT-100 TRANSMITTER		
PERFORMANCE	PRESSURE ACCURACY	±2.0% of reading at standard conditions when within a 20:1 DP turndown ratio of max pressure range selected.
OPERATING CONDITIONS	AMBIENT TEMPERATURE	-40°F to 180°F (storage) -4°F to 140°F with display -40°F to 140°F without display 14°F to 122°F for with automatic zero point setting
	PROCESS AIR TEMPERATURE	-4°F to 120°F
	HUMIDITY	5 to 95% RH, non-condensing
INPUT POWER	24 VAC	24 VAC ±10%; 50Hz/60Hz
	24 VDC	24V VDC ±10%
	POWER CONSUMPTION	1.7W at 24 VDC 2.5VA at 24 VAC
PRESSURE RANGE	MAX PRESSURE	40 in W.C. (C=A, B, D) 400 in W.C. (C=C)
DISPLAY	AVAILABLE OPTIONS	• Single DP display (C = A) • Dual Display of DP & Flow (C = B, C, or D)
I/O SIGNALS	ANALOG OUTPUTS	Single Active Analog Output, selectable based on configuration
ELECTRONICS ENCLOSURE	ENCLOSURE RATING	IP65
	DISPLAY	2.0” diagonal color graphical TFT LCD
PROGRAMMING	VIA KEYPAD	Menu driven user interface via three (3) push buttons
ELECTRICAL CONNECTIONS	POWER	Recommend shielded 20 gauge wire
	COMMUNICATIONS	Recommend shielded 20 gauge wire
	CUSTOMER PROVIDED CABLE	Recommended cable: 20 AWG, double twisted-pair, shielded cable (4 conductors total) with an overall outer diameter of 0.23–0.51 in.
PROCESS CONNECTIONS	AVAILABLE OPTIONS	Recommend tubing length up to 100 ft with inner diameter of 0.25” or 6 mm.
CERTIFICATIONS	CE	EMC, RED, RoHS, and WEEE directive

1.4 MODEL NUMBERING CODIFICATION

MODEL SELECTION GUIDE

DPT-1/ABC

A = Display
1 = Display

B = Auto Zero
0 = No Auto Zero (Required on C = C)
1 = Includes Auto Zero (Required on C = A, B, D)

C= Pressure Range
A = -1 to 1 inch W.C.
B = 0 to 10 inch W.C.
C = 0 to 28 inch W.C.
D = 0 to 1 inch W.C.

1.5 CHECKING THAT YOU RECEIVED EVERYTHING

Carefully open the DPT-100 shipping container(s) and remove all equipment. Inspect equipment for any damage. If damaged, contact Air Monitor and your freight company. Verify that the following items have been shipped:

- (1) DPT-100 Transmitter
- (4) Factory provided installation screws
- (1) DPT-100 Quick Start Guide

1.6 WORKING ENVIRONMENT

DPT-100 IP65 transmitter enclosures are designed for use in indoor installations that are free of condensing moisture. NEMA 4X enclosures with display windows are designed for use in wet indoor installations. Do not expose these transmitters to direct sunlight, temperature extremes or excessive vibration. The operating ambient air temperature range for both enclosures is 14°F to 122°F.

1.7 SERIAL NUMBER

The serial number of your DPT-100 transmitter is located outside of the enclosure. The serial number is a unique identifier for your product. Please have it available when contacting Air Monitor for assistance regarding your product.

SECTION 2.0 INSTALLATION

The DPT-100 Pressure & Flow transmitter should be installed by experienced HVAC technicians and others with related knowledge and experience with airflow systems. Air Monitor support personnel are available to assist with technical recommendations and to provide guidance by telephone and/or e-mail. On-site field engineering, installation, and service are also available at an additional cost. The installer should use good trade practices and must adhere to all state and local building codes.

Each DPT-100 is individually calibrated, configured and programmed using customer specific application data. If any problems or discrepancies are detected, contact Air Monitor's Customer Service Department at 727-447-6140 prior to proceeding.

2.1 TRANSMITTER

2.1.1 Site Selection

Careful attention to the site selection for the system components will help the installers with the initial installation, reduce start-up problems, and make future maintenance easier. For example, do not install the DPT-100 transmitter where it will be difficult for personnel to perform periodic maintenance. When selecting a site for mounting the system components, consider the criteria under Section 1.6 WORKING ENVIRONMENT, as well as the following:

- Find an easily accessible mounting location near the air handler to minimize sensor tubing lengths.
- Mount the enclosure slightly higher than the airflow sensors to reduce the risk of any condensation migrating into the enclosure. If this cannot be done, provisions for drip legs should be installed at the lowest point in the sensing lines, and example is provided below.
- The transmitter should not be located more than 100 ft from the airflow sensors and should be used with tubing with an inner diameter of 0.25" or 6mm.

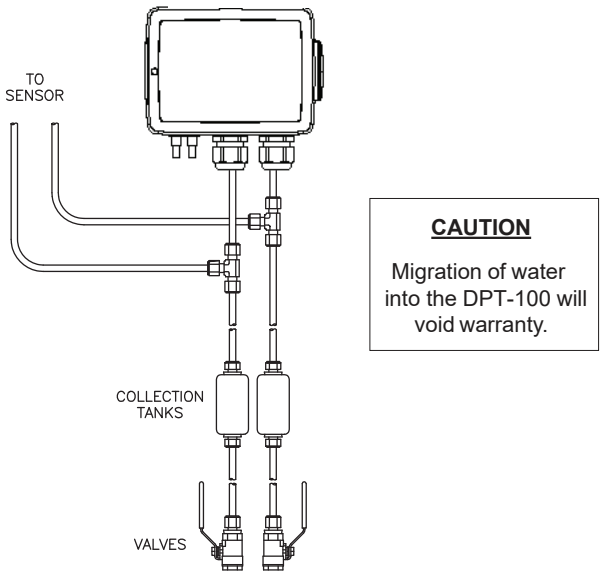

2.1.2 Transmitter Dimensions

Dimensions in mm [in]

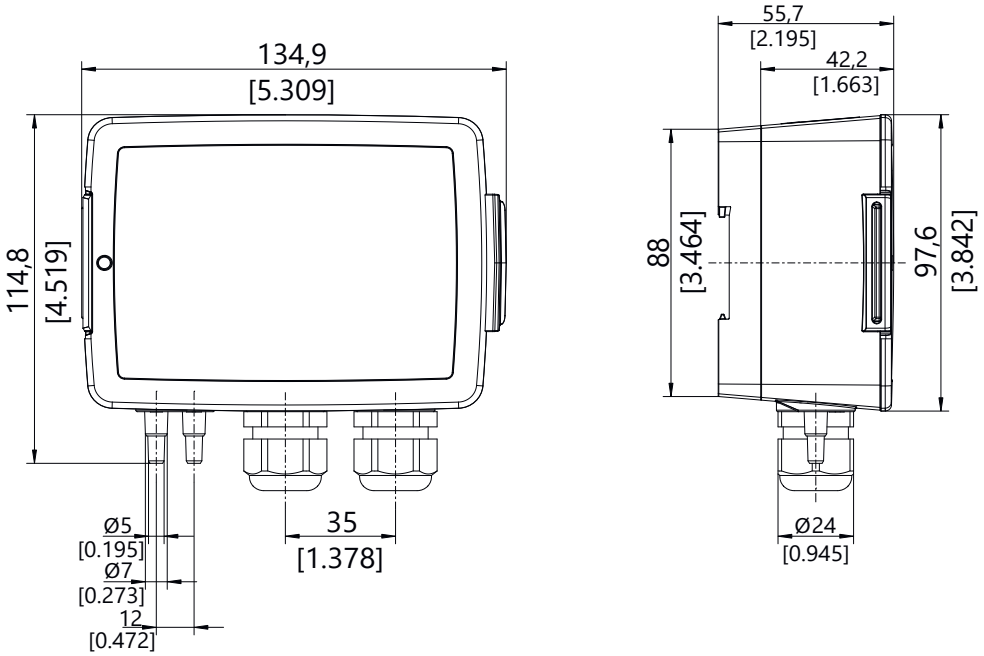

Mounting plate

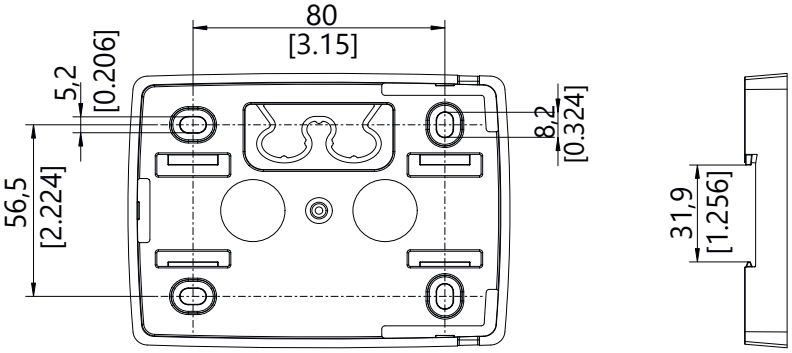

2.1.3 Transmitter Installation

Find an easily accessible location where electrical connections can be made and display readings can be taken from the floor level.

Please ensure the proper instrument orientation before mounting, see diagrams below.

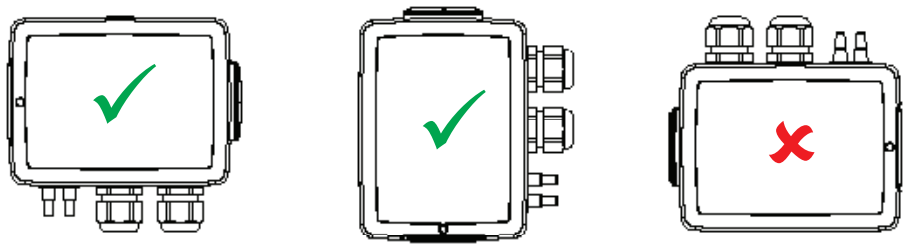

Wall/Duct Mounting

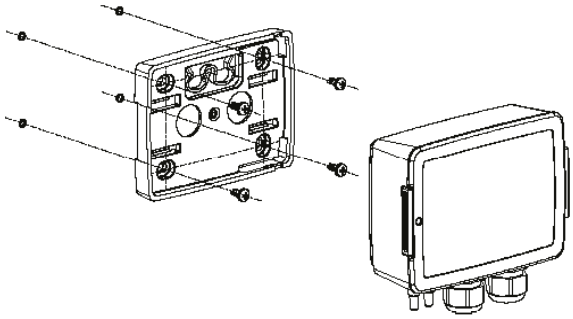

Separate the mounting plate from the case and use the screw holes as drilling templates. Use a 9/64" or 3.8 mm drill bit. Then use the provided fastening screws to mount the transmitter.

DIN Rail Mounting

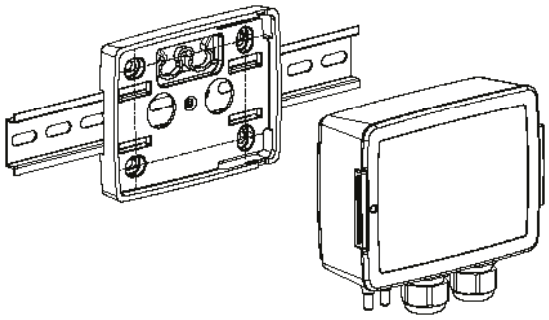

Snap the transmitter onto the DIN rail.

Install the pressure or flow sensor per manufacturer recommendations. Use 1/4 inch or 6 mm inner diameter tubing with lengths up to 100 ft. to connect to the transmitter.

Air Monitor recommends that signal tubing between the transmitter enclosure and all sensors be UV resistant, flexible, plastic tubing specifically designed for outdoor use when applicable, such as Tygon R-3400 or equivalent. Use tees or manifolds to combine multiple sensors into single high and low pressure lines running to the transmitter's channel fittings for each channel.

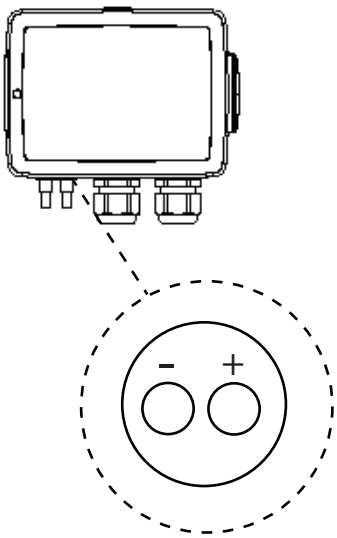

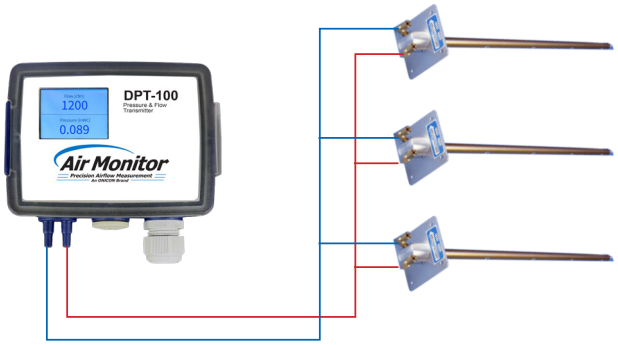

+ High Pressure port connects to the high pressure side of a DP sensor
– Low Pressure port connects to the low pressure side of a DP sensor

Air Monitor Probes will be labeled TP (High Pressure), and SP (Low Pressure)

2.1.4 Transmitter Wiring Connections

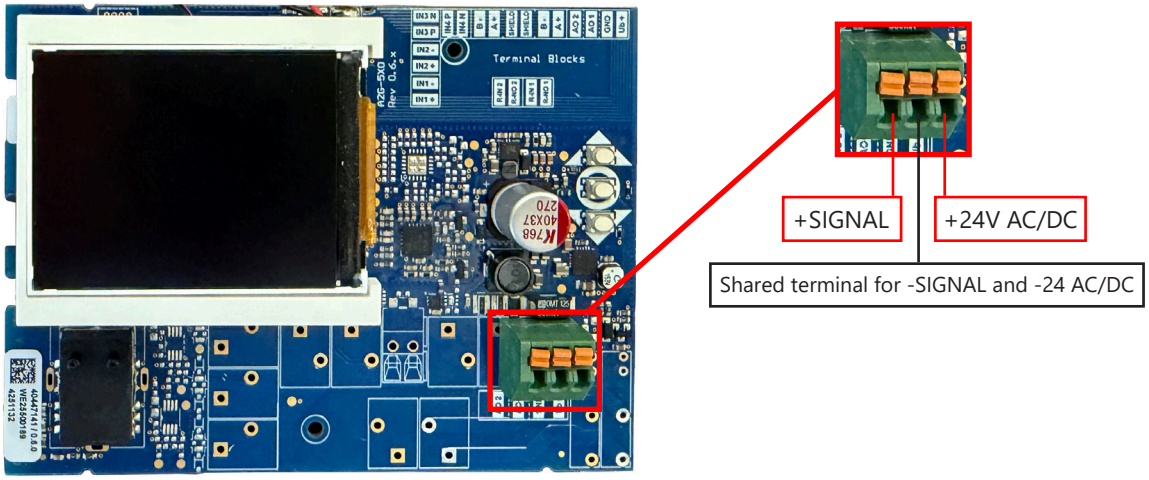

1. POWER
   I. Verify that the AC or DC connection at the power supply input terminals are per the diagram above. We recommend using a 20 AWG, shielded, two twisted-pair (4-conductor) cable with an overall outside diameter of 0.23–0.51 in. for the power and analog signal wiring. PLTC 82-300-55 or an equivalent cable is recommended.
   II. Input voltages should be supplied via one of the two methods below:
      - 1.7W @ 24 VDC
      - 2.5VA @ 24 VAC

2. ANALOG OUTPUT
   I. The signal and common ground terminals provide 4-20mA, 0-5V, 0-10V, or 2-10V signal for each output.

NOTE: The Analog loop should not have power supplied to or it will damage the analog output, we recommend 20 gauge wire.

2.2 AIRFLOW SENSOR

2.2.1 Airflow Sensor Process Connections

Air Monitor recommends that signal tubing between the transmitter enclosure and all sensors be UV resistant, flexible,plastic tubing specifically designed for outdoor use when applicable, such as tygon R-3400 or equivalent. Use tees or manifolds to combine multiple sensors into single high and low pressure lines running to the transmitter's channel fittings for each channel.

The DPT-100 should be used with tubing with an inner diameter of 0.25" or 6mm.

CAUTION
Flexible plastic signal tubing used in outdoor applications must be resistant to weathering and the effects of UV exposure.

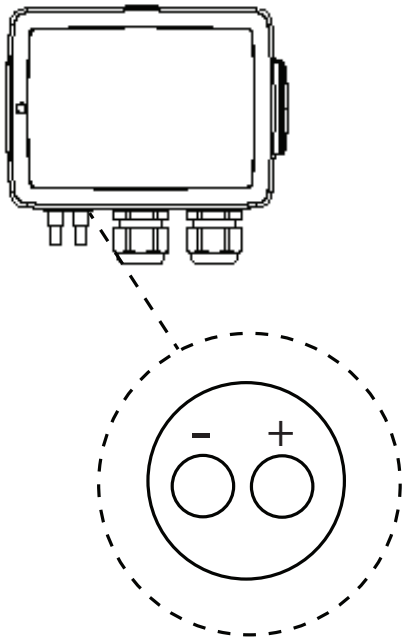

SECTION 3.0 OPERATION

3.1 START-UP

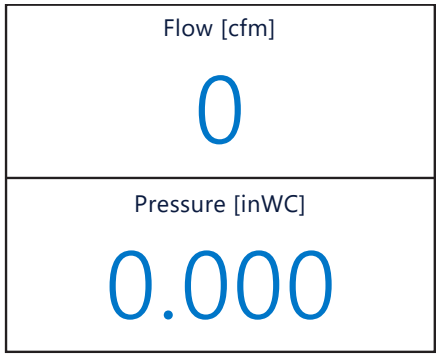

Example of The Main Display

You will see main display screen displayed at power-up.

Flow data will be displayed after a brief pause. Information shown on this screen (flow and/or pressure) will vary based on the DPT-100 operating configuration.

Line 1 is for Total Flow
Line 2 is for Pressure

3.2 CONFIGURATION

The user interface consists of 3 push-buttons used for programming the transmitter. The displayed information is dependent on the factory configuration of the DPT-100.

Push-button Definitions:

Button	Control Effects
SELECT	Press briefly to select or call up menu Press and hold for 1s to confirm or Exit
UP	Navigates through menu upwards
DN	Navigates through menu downwards

3.3 ENTERING THE DEVICE SETTINGS

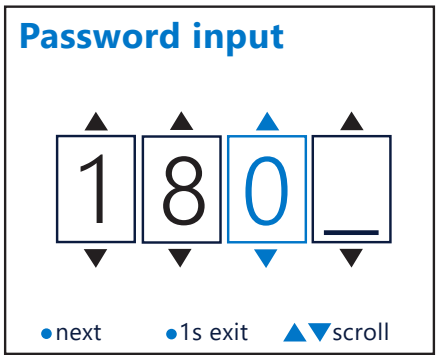

Press SELECT at any time to access the programming menus. If the password has been set previously, the following screens will be displayed.

Password Menu

Enter the password and you will be brought to the Device Settings screen. Information regarding the password settings can be found in section 4.11.2 PASSWORD.

SECTION 4.0 DEVICE SETTINGS

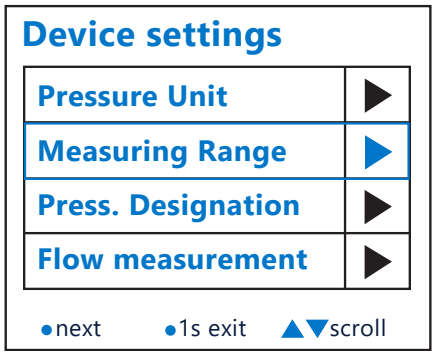

Main menu functions are used to configure transmitter settings common to the DPT-100 Configuration.

Device Settings has the following Submenus:

- Pressure unit
- Measuring range
- Press. Desingation
- Flow measurement
- Analog output 1
- NFC enable
- Display
- Alert function
- Response time
- Auto zero
- General Settings

4.1 PRESSURE UNIT

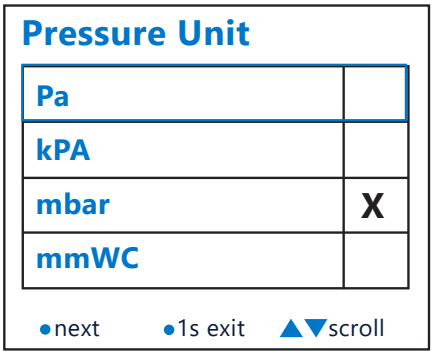

Select the appropriate pressure units used for differential pressure.
The options are:

- Pa
- kPa
- mbar
- mmWC
- inWC

Press the up and down arrow to move through the options. Push the select button to select your option and then press and hold it down one second to confirm your selection. Press and hold it one second to move back to the device settings screen.

4.2 MEASURING RANGE

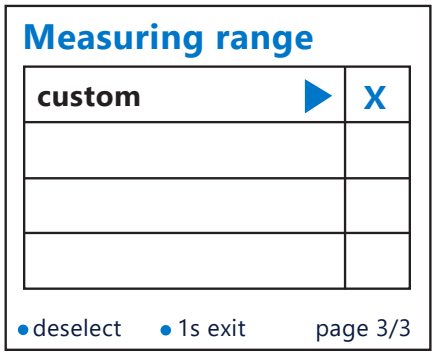

Select one of the default ranges or select custom to program your own pressure range.

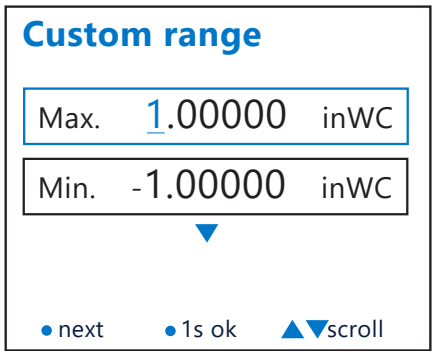

Enter in your custom range by using the up and down arrows to change the value and by pressing the select button to move right to the next digit. When completed press select for 1 second to accept the change.

4.3 PRESS. DESIGNATION

Press. Designation

▲

AHU1-FAN1-DP

▼

• next • 1s ok ▲▼scroll

In the Pressure designation menu you can label the pressure display for the main display example: AHU1-FAN1-DP.

Press and hold select for one second and it will ask you if you want to save the changes or go back to continue to edit the screen

4.4 FLOW MEASUREMENT

Flow measurement

Calc formula	▶
K-value	▶
Flow unit	▶
Scale flow output	▶

• enter • 1s exit page 1/2

The Flow measurement menu has the following submenus to select through:

- Calc Formula
- K-Value
- Flow unit
- Scale flow output
- Ambient Pres. Comp.
- Noise cancelling
- Custom designation

4.4.1 CALC FORMULA

Calc formula

Comefri	
Rosenberg	
Common probe ▶	X

• select • 1s exit page 2/2

This menu allows you to select the formula beings used for the probes. Air Monitor probes use the common probe method.

Flow = K-Value x Square root (Differential pressure)
K-Value= Area (Ft^2) x Probe Coefficient (Commonly 4005)

If measuring velocity using Air Monitor probes:
Flow=4005 x Square root (Differential pressure)

4.4.2 K-VALUE

Formula unit

m^3/h	
m^3/s	
l/s	
cfm	X

• select • 1s exit page 1/2

This screen allows you to enter in the K-Value for flow rate caculations.

4.4.3 FLOW UNIT

Formula unit

m^3/h	
m^3/s	
l/s	
cfm	X

● select ●1s exit page 1/2

This screen allows you to select the units for flow rate. The options are:

- m^3/H
- m^3/s
- l/s
- cfm
- m/s
- ft/min

4.4.4 SCALE OUTPUT FLOW

Scale flow output

▲

5000.00 cfm

▼

●next ●1s exit ▲▼scroll

The Scale Flow Output value defines the maximum expected flow value for the display and digital outputs. It primarily serves as the overload threshold. If the measured flow exceeds this value (plus a small tolerance), the display will indicate "Overload."

Key Points
Scale Flow Output: Defines the maximum expected flow value. Measurements exceeding this value (plus a small tolerance) will trigger an Overload indication.
Analog Output Scaling: Allows the analog output to be freely scaled within the limits established by the Scale Flow Output value.

4.4.5 AMBIENT PRESSURE COMPENSATION

Ambient Pres. Comp.

None	X
Altitude ▶	

● select ●1s exit page 1/1

This screen allows you to turn on elevation compensation for air density calculations for airflow.

Altitude

▲

0030 m

▼

● next ● 1s ok ▲▼scroll

If altitude is selected you can enter in your elevation in meters(m).

4.4.6 NOISE CANCELING

Noise canceling

▲

0.10000 inWC

▼

●next ●1s exit ▲▼scroll

The Noise Canceling function filters out low-level signals caused by electrical noise or minor pressure fluctuations. Any measured value below the configured threshold is treated as zero. Once the measured value exceeds the threshold, the transmitter immediately outputs the actual measured value.

4.4.7 CUSTOM DESIGNATION

Custom designation

▲

AHU1-FAN1-FL0

▼

●next ●1s exit ▲▼scroll

This menu allows you to label the airflow display for the main display example: AHU-FAN1-FLO.

4.5 ANALOG OUTPUT 1

Analog output 1

Signal type	▶
Signal source	▶
Output scaling	▶

●enter ●1s exit page 1/1

The Analog output 1 menu allows the user to change the signal type, source, and output scaling.

4.5.1 SIGNAL TYPE

Signal type

None	
0 -10V	X
2-10V	
0 - 5V	

●select ●1s exit page 1/2

Select the appropriate output used for analog output. The options are:

- 0-10V
- 2-10V
- 0-5V
- 4-20mA

4.5.2 SIGNAL SOURCE

Signal source

None	
Pressure	X
Flow	

● select ●1s exit page 1/1

In this menu you can select wither analog output will be based on flow or pressure or none at all.

4.5.3 OUTPUT SCALING

Output scaling

Endp. 1.00000 inWC

Zerop. -1.00000 inWC

▼

● next ● 1s ok ▲▼scroll

Output scaling

Endp. 5000.00 cfm

Zerop. 0.00000 cfm

▼

●next ●1s ok ▲▼scroll

This is the min and max values to scale your analog output depending on the source selected.

4.6 NFC ENABLE

NFC enable

on	X
off	

● select ●1s exit page 1/1

This function currently is unavailable but is there for potential future development.

4.7 DISPLAY

Noise canceling

▲

0.10000 inWC

▼

●next ●1s exit ▲▼scroll

The display menu has a list of submenus of display items that can be changed.

- Dashboard
- Value 1
- Value 2

4.7.1 DASHBOARD

Dashboard

1 Value	
2 Value	X
3 Value	
4 Value	

• select •1s exit page 1/1

This will allow you to select wither to display one item: Pressure or flow; or two items and display both.

4.7.2 VALUE 1

Value 1

None	
Pressure	
Flow	X

• select •1s exit page 1/1

Select which value to displayed on top if displaying two items or the the solo item to be displayed.

4.7.3 VALUE 2

Value 2

None	
Pressure	X
Flow	

• select •1s exit page 1/1

Select which value to displayed on bottom if displaying two items.

4.8 ALERT FUNCTION

Alert function

Signal source	▶
Threshold	▶
Hysteresis	▶
Color 1	▶

• enter • 1s exit page 1/2

This screen and submenus below are for relays which are not available currently on the model, reserved for future development.

SIGNAL SOURCE

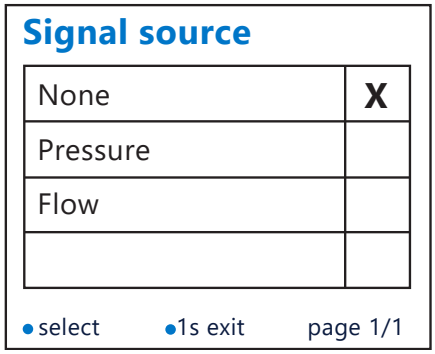

THRESHOLD

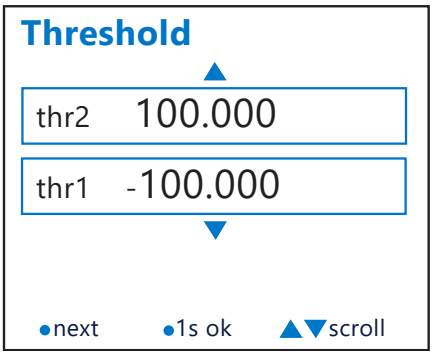

HYSTERESIS

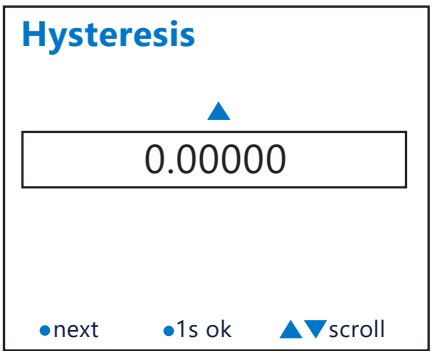

COLOR 1-3

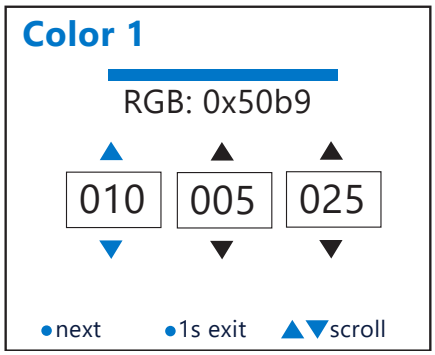

4.9 RESPONSE TIME

Response Time

3 s	
4 s	X
5 s	
6 s	

• select •1s exit page 2/6

The response time indicates how quickly the transmitter responds to changes in pressure conditions within the system. It is defined as the time required for the transmitter output to reach 63% of its final measured value after a step change in pressure.

4.10 AUTO ZERO

Auto zero

Off	
Auto zero interval ▶	X

• select •1s exit page 1/1

The Auto Zero function periodically corrects the zero point at a configurable interval to compensate for zero drift and maintain the long-term accuracy of the piezoresistive sensor element.

4.10.1 AUTOZERO INTERVAL

Auto zero interval

▲

030 min

▼

•next •1s ok ▲▼scroll

The auto zero interval can be defined in this screen.

4.11 GENERAL SETTINGS

General settings

Device reset	▶
Password	▶
Password on/off	▶
Background color	▶

• enter • 1s exit page 1/2

In the General settings menu the following submenus are available:

- Device Reset
- Password
- Password on/off
- Background color
- Font color
- Confirmation Menu

4.11.1 DEVICE RESET

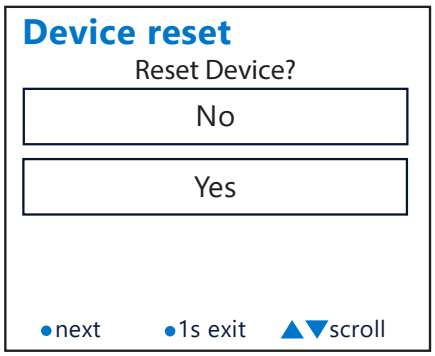

This allows the user to reset the instrument to factory settings

4.11.2 PASSWORD

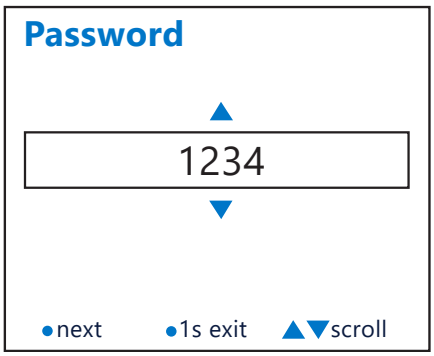

Use the up and down buttons to change the password of the device and press enter to move to the next character. Default Password is 1234.

4.11.3 PASSWORD ENABLE

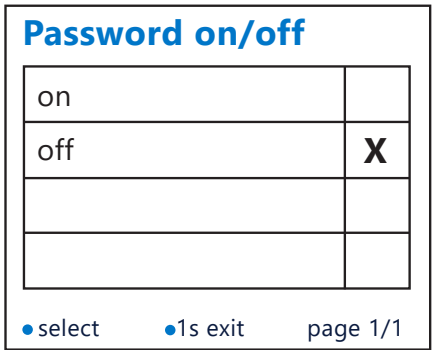

This menu turns on or off the password requirement to change settings.

4.11.4 BACKGROUND COLOR

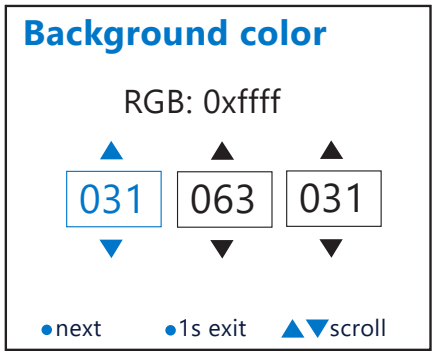

This menu allows the user to change the color scale of the background color.

4.11.5 FONT COLOR

Font color

Text color	▶
Indicator color	▶
Grid color	▶
Title color	▶

• enter • 1s exit page 1/2

This menu allows you to change the font color. The following submenus are available:

- Text color
- Indicator color
- Grid color
- Title color
- Standard font color

4.11.6 CONFIRMATION MENU

Confirmation Menu

on	X
off	

• select •1s exit page 1/1

This setting enables the confirmation function for menu changes. When enabled, the transmitter prompts you to accept or discard any changes before exiting the menu.

SECTION 5.0 MAINTENANCE

The DPT-100 does not contain any parts that require scheduled maintenance.

The following information is provided, as general guidelines, if you wish to establish an inspection/maintenance program. Start with annual inspections and adjust the frequency as required to meet your needs.

Cleanliness

- Verify condensation or other sources of liquids are not present inside the DPT-100.

Mechanical

- Verify signal connections are secure.
- Inspect signal lines for any cracks or leaks.
- Verify mounting hardware is secure.

Electrical

- Inspect wiring to the DPT-100 for good connections and absence of corrosion.

Calibration Intervals

- Air Monitor does not recommend a specific time interval between re-calibrations. Calibrations should be scheduled to meet the needs of the facility where the DPT-100 is installed. For example, critical care facilities may wish to schedule annual re-calibrations while commercial/retail buildings may only schedule re-calibrations at 3-5 year intervals.

SECTION 6.0 TROUBLESHOOTING

Code	Name	Cause	Measure
0	ERROR_NONE	No error	No error
1	ERROR_EEPROM_NO_RESPONSE	• ST25: Writing to RAM failed • ST25: Reading RAM failed	• Follow the instructions on the screen. • Restart the instrument if this occurs repeatedly
2	ERROR_EEPROM_INVALID_MAGICNR	Invalid user settings identified in the memory.	Default user settings are loaded automatically.
3	ERROR_FACTORY_INVALID_MAGICNR	Invalid factory options identified in the memory.	Default factory options are loaded automatically.
4	ERROR_FACTORY_ERASE_FAILED	Failed to delete the factory option from the flash memory	Contact the manufacturer
5	ERROR_FACTORY_WRITE_FAILED	Failed to write the factory options from the flash memory	Contact the manufacturer
6	ERROR_PRESSENS_TIMEOUT	This error appears if the pressure sensor does not display any new measurement data within a timeout	• Follow the instructions on the screen. • Restart the instrument if this occurs several times
7	ERROR_PRESSENS_NO_RESPONSE	No response received from the pressure sensor	Follow the instructions on the screen
8	ERROR_ADC_CONVERSION_FAILED	This error appears if the analog digital conversion takes too long (>10 ms).	• Follow the instructions on the screen. • Restart the instrument if this occurs several times

Code	Name	Cause	Measure
9	ERROR_AOUT1_COMMON_MODE_ OVER_RANGE_FAULT	This error appears if the analog output AOUT1 displays the common_mode_over_range error	Check or connect signal at AOUT1
10	ERROR_AOUT1_LOAD_FAULT	This error appears if the analog output AOUT1 displays the load_ fault error	Check or connect signal at AOUT1
11	ERROR_AOUT1_OVER_TEMPERATURE_ WARNING	This error appears if the analog output AOUT1 displays the over_ temperature error	Instrument is too warm, leave it to cool
12	ERROR_AOUT2_COMMON_MODE_ OVER_RANGE_FAULT	Invalid factory options identified in the memory.	Check or connect signal at AOUT2
13	ERROR_AOUT2_LOAD_FAULT	This error appears if the analog output AOUT2 displays the load_ fault error	Check or connect signal at AOUT2
14	ERROR_AOUT2_OVER_TEMPERATURE_ WARNING	This error appears if the analog output AOUT2 displays the error over_temperature error	Instrument is too warm, leave it to cool
15	ERROR_CONFIG_INVALID	Invalid signal source specified	Restart the instrument if this occurs reapeatedly
16	ERROR_PRESSENS_ZERO_POINT_ OFFSET_OVER_RANGE_FAULT	Zero point adjustment. Offset too large	Defective valve with auto-zero or pressure connected without auto-zero value
ol	Screen displays ol on flow value	Flow is outside of the limits programmed or designed for this device	Make sure the scale flow output is correct and make sure the CFM value expected is below this limit.