VOLU-trol/F

PITOT MEASUREMENT & CONTROL STATION

We believe in our products, so should you.
1 YEAR NO FAULT WARRANTY
3 YEAR MANUFACTURER WARRANTY

The VOLU-trol/F continuously measures and controls ducted airflow and is well suited for applications where noise control and installed system cost are important.

FACTORY CONFIGURED

ON TIME DELIVERY

BEST CUSTOMER SERVICE

• Variable Air Volume (VAV) • Ducted Airflow •

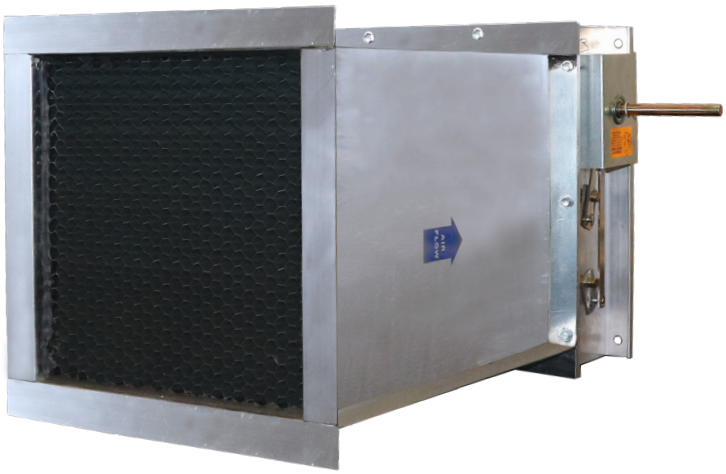

DESCRIPTION

The VOLU-trol/F is a multi-point, self-averaging Pitot measurement/control station with integral air straightener-equalizer honeycomb cell, and integral control damper capable of continuously measuring and controlling ducted airflow with an accuracy of 2% or better. The VOLU-trol/F derives its high degree of accuracy from a combination of precision sensor locations, honeycomb airflow processing, pneumatic averaging of a large number of sensed airflow pressures and patented symmetrical averaging (Patent No. 3,685,355). This requires that all stages in the averaging process occur at a point where there is a balanced array of sensors present, thereby assuring that each sensed pressure is given equal weight in the averaging process. With no maximum size or capacity limits, the VOLU-trol/F affords a high degree of flexibility in VAV system design. The VOLU-trol/F is very well suited to VAV applications where control of noise and installed system cost is important.

FEATURES

Accuracy - ±2% of reading accuracy throughout velocity ranges up to 4,000 FPM.

Flow Angle Accommodation - Insensitive to flow angle variations of as much as ±30° when faced in the normal direction of flow.

Environment Versatility - Can operate in any humidity range from 0 to 100% RH without affecting the reading and measures up to 4,000 FPM in heated environments up to 200°F.

Low Cost - High Accuracy - Achieve ±2% of reading accuracy for a fraction of the cost of thermal dispersion technology.

BMS/BAS Communication - Pairing the VOLU-trol/F with the VELTRON III provides Display, BACnet, MODBUS, and Analog outputs for ±3% of the reading system accuracy.

CONSTRUCTION FEATURES

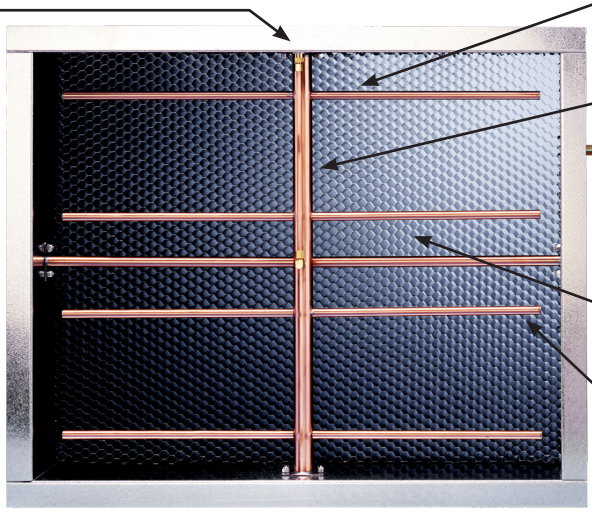

SPECIFICATIONS*

PITOT MEASUREMENT / CONTROL STATION	
CONFIGURATIONS	Rectangular
ACCURACY	±2% of actual airflow
OPERATING TEMPERATURE	Continuous operation to 200°F
AIR EQUALIZER - STRAIGHTENER CELL	Corrosion resistant 3003 aluminum. 3" deep x ½" cell
TOTAL PRESSURE MANIFOLD	Copper tubing assembled wih 50/50 tin/lead solder. Galvanized mounting and support brackets
STATIC PRESSURE HEADER AND SENSORS	• Copper tubing • Galvanized mounting bracket
CONNECTION FITTINGS	¼" brass compression type located on the long dimension of rectangular stations
DAMPER BLADES	4" (102) wide, 6063T5 heavy gauge extruded aluminum, airfoil shaped blades
MINIMUM TORQUE REQUIREMENTS FOR FIELD PROVIDED ACTUATORS	5 in. lbs/ft^2
DAMPER BEARINGS	Molded synthetic
DAMPER LINKAGE	Concealed
CASING DEPTH	24"
CASING	Rectangular - 14 gauge galvanized sheetmetal, intermittent welded casing with metal caulking
FLANGES	Rectangular: 1 ½" wide, 90° formed. Sizes up to 144" x 144"
RESISTANCE	Station: Shall not exceed 0.80" w.c. @ 2000 FPM Damper: Maximum 0.03" w.c. @ 1,000 FPM across a 24" x 24" damper

VOLU-trol/F DIMENSIONAL SPECIFICATION

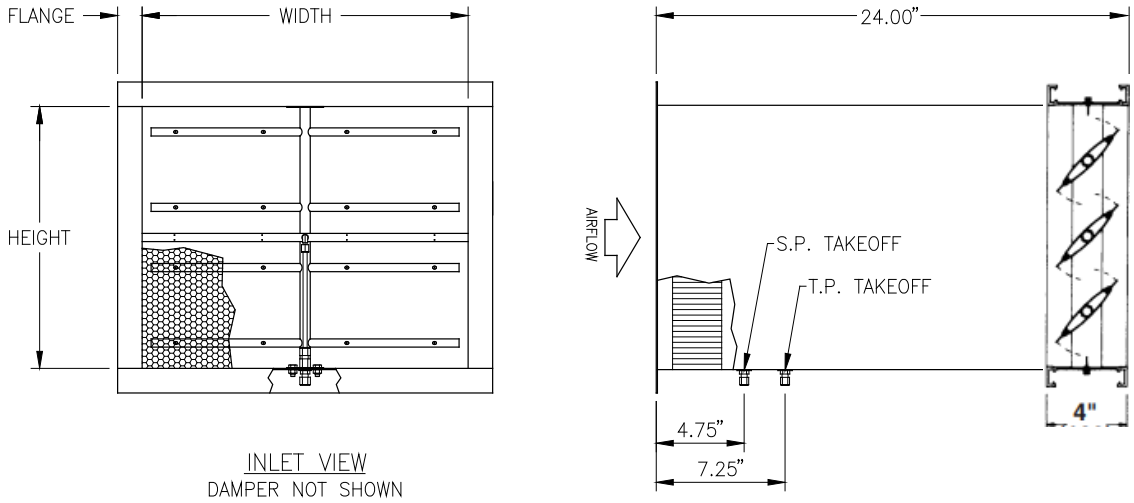

*Specifications subject to change without notice.

MODEL SELECTION GUIDE
Model Number Coding = VOLU-trol/ABCD-EFGHI

VOLU-trol/F = Pitot Measurement/Control Station

A = Type
F = F type (FAN-E)

B = Long Dimension
A = <= 12″
B = >12″ to 24″
C = >24″ to 30″
D = >30″ to 36″
E = >36″ to 48″
F = >48″ to 60″
G = >60″ to 72″

C = Short Dimension
A = <= 12″
B = >12″ to 24″
C = >24″ to 30″
D = >30″ to 36″
E = >36″ to 48″

D = Width (Depth) Dimension
3 = 24″ depth

E = Materials of Construction
1 = 14 ga galv steel

F = Flange Construction
1 = 1½″ 90° formed flange

G = Signal Mounting
L = Long side (default)
S = Short side

H = Damper Orientation
L = Long side (default)
S = Short side

I = Process Connections
1 = ¼″ brass compression (default)
2 = ¼″ brass hose barb

11451 Belcher Road South • Largo, FL 33773 • USA • +1 (727) 447-6140
www.airmonitor.com/hvac/ • hvacsales@airmonitor.com