OAM II

Outdoor Airflow Measurement
Installation and Operation Manual

For use with products shipped 6-2019 and later

Air Monitor
Precision Airflow Measurement
An ONICON Brand

DOC-0001938 Rev.M

SAFETY INFORMATION

The OAM II Outdoor Airflow Measurement System was calibrated at the factory before shipment. To ensure correct use of the system, please read this manual thoroughly.

Regarding this Manual:

- This manual should be passed on to the end user.
- Before use, read this manual thoroughly to comprehend its contents.
- The contents of this manual may be changed without prior notice.
- All rights reserved. No part of this manual may be reproduced in any form without Air Monitor's written permission.
- Air Monitor makes no warranty of any kind with regard to this material, including, but not limited to, implied warranties of merchantability and suitability for a particular purpose.
- All reasonable effort has been made to ensure the accuracy of the contents of this manual. However, if any errors are found, please inform Air Monitor.
- Air Monitor assumes no responsibilities for this product except as stated in the warranty.
- If the customer or any third party is harmed by the use of this product, Air Monitor assumes no responsibility for any such harm owing to any defects in the product which were not predictable, or for any indirect damages.

SAFETY PRECAUTIONS:

The following general safety precautions must be observed during all phases of installation, operation, service, and repair of this product. Failure to comply with these precautions or with specific WARNINGS given elsewhere in this manual violates safety standards of design, manufacture, and intended use of the product. Air Monitor assumes no liability for the customer's failure to comply with these requirements. If this product is used in a manner not specified in this manual, the protection provided by this product may be impaired.

The following messages are used in this manual:

WARNING
Messages identified as "Warning" contain information regarding the personal safety of individuals involved in the installation, operation or service of this product.

CAUTION
Messages identified as "Caution" contain information regarding potential damage to the product or other ancillary products.

IMPORTANT NOTE
Messages identified as "Important Note" contain information critical to the proper operation of the product.

TABLE OF CONTENTS

SECTION 1.0 GENERAL INFORMATION 5
1.1 PURPOSE OF THIS MANUAL 5
1.2 TYPICAL AIRFLOW MEASUREMENT SYSTEM INSTALLATIONS 5
1.3 STANDARD FEATURES AND SPECIFICATIONS 7
1.4 MODEL NUMBERING CODIFICATION 9
1.5 CHECKING THAT YOU RECEIVED EVERYTHING 10
1.6 WORKING ENVIRONMENT 10
1.7 SERIAL NUMBER 10

SECTION 2.0 INSTALLATION 11
2.1 TRANSMITTER 11
2.1.1 Site Selection 11
2.1.2 Transmitter Dimensions 12
2.1.3 Transmitter Installation 12
2.1.4 Transmitter Wiring Connections 13
2.2 AIRFLOW SENSOR 15
2.2.1 Uni-Sensor 15
2.2.2 Dimensional Specifications 15
2.2.3 Airflow Sensor Installation 16
2.2.3.1 Moisture Prevention 16
2.2.3.2 Louvered Inlets 17
2.2.3.3 Rain Hood Inlets 19
2.2.3.4 Ducted Inlets 19
2.2.3.5 Multiple Inlets (OAM II transmitter in Single Mode) 20
2.2.3.6 Inlets with an Aspect Ratio > 6:1 20
2.2.3.7 Very Large Inlets 20
2.2.4 Airflow Sensor Process Connections 20
2.3 AIRFLOW STATION 21
2.3.1 Airflow Station Installation 21
2.3.1.1 Plenum Inlets 22
2.4 TEMPERATURE SENSORS 22
2.4.1 Temperature Sensors Installation 23
2.4.2 Temperature Sensor (RTD) Input Connections 23

SECTION 3.0 OPERATION 24
3.1 START-UP 24
3.2 CONFIGURATION 25
3.3 STATUS BAR 25
3.4 ENTERING THE PROGRAMMING MENUS 26

SECTION 4.0 MAIN MENU 27
4.1 FLOW SETTINGS 27
4.2 DISPLAY SETTINGS 27
4.3 NETWORK CONFIGURATION 28
4.4 SET PASSWORD 28
4.5 RESTORE FACTORY SETTINGS 28
4.6 PRODUCT INFORMATION 29
4.7 SENSOR STATUS 29
4.8 BOARD DATA 29
4.9 ANALOG OUTPUT TEST 29

SECTION 5.0 SYSTEM SET-UP MENU 30
5.1 FLOW CONFIGURATION 30
5.2 DISPLAY CONFIGURATION 32
5.3 ANALOG OUTPUT CONFIGURATION 33
5.4 FILTERS AND LOCKDOWN 34
5.5 FIELD CHARACTERIZATION 34
5.6 CUSTOM ID CONFIGURATION 36

SECTION 6.0 COMMUNICATIONS 37
6.1 BACNET MS/TP 37
6.1.1 BACnet Object Types 37
6.1.2 Protocol Implementation Statement 37
6.1.3 Standard BACnet Objects Supported 38
6.1.4 BACnet Analog Inputs 39
6.1.5 Analog Input Object 40

6.2 MODBUS RTU 40
6.2.1 MODBUS Registers 41

SECTION 7.0 MAINTENANCE 43

SECTION 8.0 TROUBLESHOOTING 43

SECTION 1.0 GENERAL INFORMATION

Thank you for purchasing the OAM II Outdoor Airflow Measurement System. As our valued customer, Air Monitor's commitment to you is to provide quality service and support while continuing to offer you accurate, reliable products to meet your flow measurement needs.

1.1 PURPOSE OF THIS MANUAL

This manual provides information regarding the installation, operation and maintenance of your differential pressure airflow measurement system. This is not an electrical or HVAC trade manual. This manual is the basic reference tool for the OAM II transmitter, including its main power connection and associated signal inputs and outputs. The complete system consists of the transmitter and associated airflow and temperature sensors. Please refer to supplemental documents for additional information.

1.2 TYPICAL AIRFLOW MEASUREMENT SYSTEM INSTALLATIONS

Air Monitor's OAM II Airflow Measurement System accurately measures the differential pressure created by airflow entering and moving through an inlet such as a set of louvers or a layer of expanded metal.

Temperature is also measured via a separate sensor. The measured pressure drop and temperature are converted to actual air flow readings utilizing proprietary algorithms that provide density compensation and signal conditioning.

The OAM II can be used with most single, dual, and split inlets found on air handlers and built-up systems. Depicted on the next page are the most commonly encountered inlet configurations. With larger inlets or multiple inlets to one air handler, multiple sensors would be connected in parallel using manifolds.

1.2 TYPICAL AIRFLOW MEASUREMENT SYSTEM INSTALLATIONS (CONTINUED)

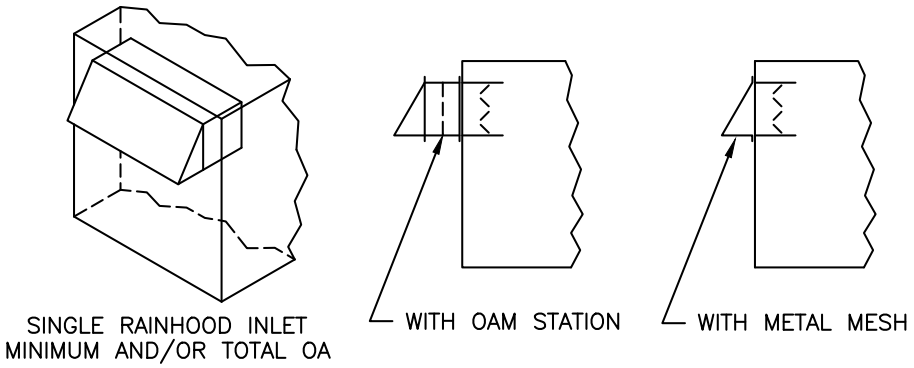

The example above illustrates a single OA inlet. The OAM II would be configured for single channel operation for this application.

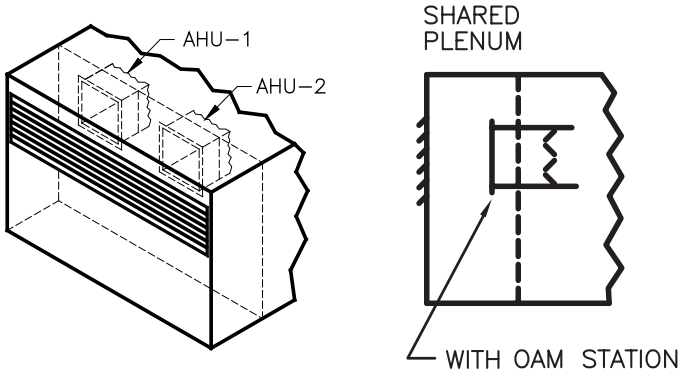

The example above illustrates a dual OA inlet (two inlets providing outside air to separate air handlers). In this application, the OAM II would be configured for dual channel operation. Separate flow readings will be reported for each channel in this configuration.

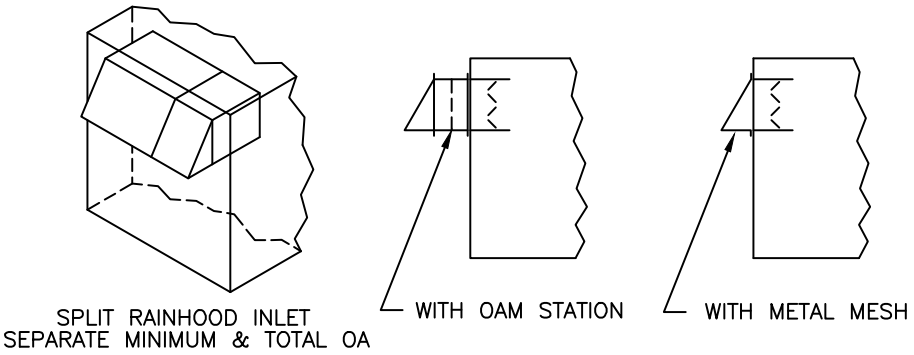

The example above illustrates a split OA inlet. Two inlets separately provide minimum and economizer outside air flow to a single air handler. In this application, the OAM II would be configured for dual channel, min/economizer (split) operation. Total flow and separate flow readings for each channel will be reported in this configuration.

1.3 STANDARD FEATURES AND SPECIFICATIONS*

OAM II TRANSMITTER		
PERFORMANCE	SYSTEM ACCURACY	AMCA certified accuracy of ±5% or better in the velocity range of 150 to 2400 feet per minute[1]
	VELOCITY RANGE	100 to 3000 SFPM
	TEMPERATURE SENSOR ACCURACY	±0.1°F at 32°F
	DIFFERENTIAL PRESSURE RESOLUTION	±0.0004 in W.C.
	ABSOLUTE PRESSURE ACCURACY	±0.015 psi from 32°F to 120°F
OPERATING CONDITIONS	AMBIENT TEMPERATURE	-20°F to 180°F (storage) 0°F to 120°F without heater -40°F to 120°F with heater
	FLUID TEMPERATURE	-40°F to 120°F
	HUMIDITY	0 to 99% RH, non-condensing
INPUT POWER	24 VAC	15 VA @ 24 VAC; 40 VA with heater
	24 VDC	10 W @ 24 VDC; 35 W with heater
TRANSDUCER DESIGN	AVAILABLE OPTIONS	• Single channel, one (1) transducer pair • Dual channel, two (2) transducer pairs
I/O SIGNALS	ANALOG OUTPUTS	Four (4) analog outputs, selectable based on configuration
	SERIAL COMMUNICATION	RS485, BACnet® MS/TP or MODBUS® RTU
	TEMPERATURE INPUT(S)	100Ω 3-wire RTDs, qty provided (one or two) based on configuration
	PRESSURE (BAROMETRIC)	Built-in barometric (absolute) pressure sensor for automatic elevation compensation
ELECTRONICS ENCLOSURE	AVAILABLE OPTIONS	• Aluminum, NEMA 1 • Poly, NEMA 4X with window • Poly, NEMA 4X, no window • Poly, NEMA 4X, no window with heater
	DISPLAY	3.5" diagonal color graphical FTF LCD
PROGRAMMING	Menu driven user interface via four (4) push buttons	
ELECTRICAL CONNECTIONS	POWER	Removable terminal block for use with 16 to 24 gage wire
	COMMUNICATIONS	Removable terminal block for use with 16 to 24 gage wire
	I/O	Removable terminal blocks for use with 16 to 24 gage wire
PROCESS CONNECTIONS	AVAILABLE OPTIONS	• ⅛" FNPT, both High and Low signal connections • ¼" compression, both High and Low signal connections • 3⁄16" hose barb, both High and Low signal connections
APPROVALS	FCC	Part 15 Subpart B, Class A device
	BTL	Certified to BACnet standard ISO 16484-5 rev. 1.12

***** SPECIFICATIONS subject to change without notice.

1.3 STANDARD FEATURES AND SPECIFICATIONS (CONTINUED)*

OAM II FLOW ELEMENT		
FLOW SENSOR DESIGN	UNI-SENSOR	Integral outside reference and inlet airflow sensor, proprietary design
PERFORMANCE	FREE INLET (HOOD)	150 to 3000 SFPM flow range based on configuration
	DUCTED	150 to 3000 SFPM flow range based on configuration
	LOUVER	Operating range from 0.003 to 5.0 in W.C.
MATERIALS OF CONSTRUCTION	316 SS	
OPERATING CONDITIONS	AIRFLOW VELOCITY	0 - 3000 SFPM
	FLUID TEMPERATURE RANGE	-40°F to 120°F
	HUMIDITY	0 to 100% RH, condensing
	ENVIRONMENT	Impervious to airborne dirt, debris and mositure
PROCESS CONNECTIONS	AVAILABLE OPTIONS	• ⅛" FNPT, both High and Low signal connections • ¼" compression, both High and Low signal connections • 3⁄16" hose barb, both High and Low signal connections

AIRFLOW STATION		
FLOW ELEMENT	FLOW SENSOR DESIGN	Uni-sensor(s), 3" length, 316 SS
MATERIALS OF CONSTRUCTION	AVAILABLE OPTIONS	• 14 gage sheet metal casing, galvanized with 1.5" flange • Expanded metal, electroplated
PERFORMANCE	FREE INLET (HOOD)	±5% of reading from 150 to 2400 SFPM
	DUCTED	±5% of reading from 150 to 2400 SFPM
OPERATING CONDITIONS	FLUID TEMPERATURE RANGE	-40°F to 120°F
PROCESS CONNECTIONS	AVAILABLE OPTIONS	• ⅛" FNPT, both High and Low signal connections • ¼" compression, both High and Low signal connections • 3⁄16" hose barb, both High and Low signal connections

***** SPECIFICATIONS subject to change without notice.

1.4 MODEL NUMBERING CODIFICATION

Model Number Coding = OAM II-AFS-ABCD-EEFFG-HHIIJ (-HHIIJ only for dual channel configs)

A = Model Configurations
- 2 = Single Channel
- 6 = Dual Channel (Split for Single System Min/Economizer)
- 8 = Dual Channel (Separate Systems)

B = Enclosure
- 1 = NEMA 1 (default)
- 2 = NEMA 4X with window
- 3 = NEMA 4X
- 4 = NEMA 4X with heater

C = Feature Set (Based on model configuration)
- 2 = 24V AC/DC power, four (4) analog outputs, RS485 serial communications, one (1) 100Ω 3-wire RTD
- 3* = 24V AC/DC power, four (4) analog outputs, RS485 serial communications, two (2) 100Ω 3-wire RTDs

D = Process Connection
- 2 = 1/4″ compression fittings
- 3 = 3/16″ hose barb fittings

***C = 3 when A = 8**

EE = Ch 1: Flow Range
- 1B = Flow range 150 to 2400 SFPM

FF = Ch 1: Number of Uni-Sensors

01 = One (1)	07 = Seven (7)
02 = Two (2)	08 = Eight (8)
03 = Three (3)	09 = Nine (9)
04 = Four (4)	10 = Ten (10)
05 = Five (5)	MM = Station Mounted Sensors
06 = Six (6)	

G = Ch 1: Unit-Sensor Design
- 3 = 3" 316 SS Sensor(s) (Default)
- M = Station (Required for FF = MM)

HH = Ch 2: Flow Range
- 2B = Flow range 150 to 2400 SFPM

II = Ch 2: Number of Uni-Sensors

01 = One (1)	07 = Seven (7)
02 = Two (2)	08 = Eight (8)
03 = Three (3)	09 = Nine (9)
04 = Four (4)	10 = Ten (10)
05 = Five (5)	MM = Station Mounted Sensors
06 = Six (6)	

J = Ch 2: Unit-Sensor Design
- 3 = 3" 316 SS Sensor(s) (Default)
- M = Station (Required for FF = MM)

Airflow Station Model Number Coding = OAM II-AFS-ABC-DEF-GGH

OAM II AFS = Outdoor Airflow Measuring Station

A = Long Dimension (in)

A = 8″ to 12″	G = >72″ to 84″
B = >12″ to 24″	H = >84″ to 96″
C = >24″ to 36″	I = >96″ to 108″
D = >36″ to 48″	J = >108″ to 120″
E = >48″ to 60″	K = >120″ to 132″
F = >60″ to 72″	L = >132″ to 144″

B = Short Dimension (in)

A = 8″ to 12″	G = >72″ to 84″
B = >12″ to 24″	H = >84″ to 96″
C = >24″ to 36″	I = >96″ to 108″
D = >36″ to 48″	J = >108″ to 120″
E = >48″ to 60″	K = >120″ to 132″
F = >60″ to 72″	L = >132″ to 144″
	R = Round duct

C = Casing Width (in)
- A = 8″ depth (Default)
- C = Up to 16″ depth
- D = Up to 24″ depth

D = Materials of Construction
- 1 = 14 ga Galvanized steel, 1½″ 90 degree flanges

E = Screen Material of Construction
- 1 = Expanded Metal, 51% FA

F = Process Connections
- 2 = ¼″ comp fittings
- 3 = 3/16″ hose barb fittings

GG = Number of Sensors

01 = 1	06 = 6
02 = 2	07 = 7
03 = 3	08 = 8
04 = 4	09 = 9
05 = 5	10 = 10

H = Uni-Sensor Design
- 3 = 3″ Uni-Sensor, typical

Notes
1. Uni-sensor qty is based on type and size of installation
2. Options selected may impact price.

Please refer to the Ordering Guide and Order Form for additional information regarding flow element/station selection and system operation ranges.

1.5 CHECKING THAT YOU RECEIVED EVERYTHING

Carefully open the OAM II shipping container(s) and remove all equipment. Inspect equipment for any damage. If damaged, contact Air Monitor and your freight company. Verify that the following items have been shipped:

- (1) OAM II Transmitter
- (1) Temperature probe with mounting hardware
  (Packed inside enclosure or part of OAM II Station)
- (1) OAM II Installation and Operation Manual
- (1) Factory Set-Up Information Sheet

Additional items included with the shipment may contain the following:
- (1) or more pre-fabricated OAM Airflow Stations
- (1) or more uni-sensors, including mounting hardware
- A second temperature probe with mounting hardware for use with dual channel systems

1.6 WORKING ENVIRONMENT

OAM II NEMA 1 transmitter enclosures are designed for use in indoor installations that are free of condensing moisture. NEMA 4X enclosures with display windows are designed for use in wet indoor installations. Do not expose these transmitters to direct sunlight, temperature extremes or excessive vibration. The operating ambient air temperature range for both enclosures is 0°F to 120°F.

OAM II NEMA 4X transmitter enclosures without windows are designed for indoor or outdoor use. Do not expose these transmitters to excessive vibration. Whenever possible, avoid exposure to direct sunlight. The operating ambient air temperature range is 0°F to 120°F. When provided with a heater, the operating ambient temperature range is -40°F to 120°F.

1.7 SERIAL NUMBER

The serial number of your OAM II transmitter is located outside of the enclosure. The serial number is a unique identifier for your product. Please have it available when contacting Air Monitor for assistance regarding your product.

SECTION 2.0 INSTALLATION

The OAM II Airflow Measurement System should be installed by experienced HVAC technicians and others with related knowledge and experience with airflow systems. Air Monitor support personnel are available to assist with technical recommendations and to provide guidance by telephone and/or e-mail. On-site field engineering, installation, and service are also available at an additional cost. The installer should use good trade practices and must adhere to all state and local building codes.

Each OAM II is individually calibrated, configured and programmed using customer specific application data. Configuration and programming parameters are recorded on the Factory Set-Up Information Sheet provided with the unit. Review this information and verify that the OAM II set-up is correct for your application. If any problems or discrepancies are detected, contact Air Monitor's Customer Service Department at 1-800-AIRFLOW prior to proceeding.

2.1 TRANSMITTER

2.1.1 Site Selection

Careful attention to the site selection for the system components will help the installers with the initial installation, reduce start-up problems, and make future maintenance easier. For example, do not install the OAM II transmitter where it will be difficult for personnel to perform periodic maintenance. When selecting a site for mounting the system components, consider the criteria under Section 1.6: WORKING ENVIRONMENT, as well as the following:

- Find an easily accessible mounting location near the air handler to minimize sensor tubing lengths.
- Mount the enclosure slightly higher than the airflow sensors to reduce the risk of any condensation migrating into the enclosure. If this cannot be done, provisions for drip legs should be installed at the lowest point in the sensing lines.
- Use the table below to determine the appropriate sensor tubing diameter based on the distance from the enclosure to the airflow sensors. Contact Air Monitor for assistance if longer tubing lengths are required.

Nominal/Min Tubing Internal Diameter (in)	Tube Length Total (ft)	Uni-sensor Max Distance from Transmitter (ft)
⅛ (0.125)	30	15
3⁄16 (0.1875)	200	100
¼ (0.25)	500	250
⅜ (0.375)	1000	500

2.1.2 Transmitter Dimensions

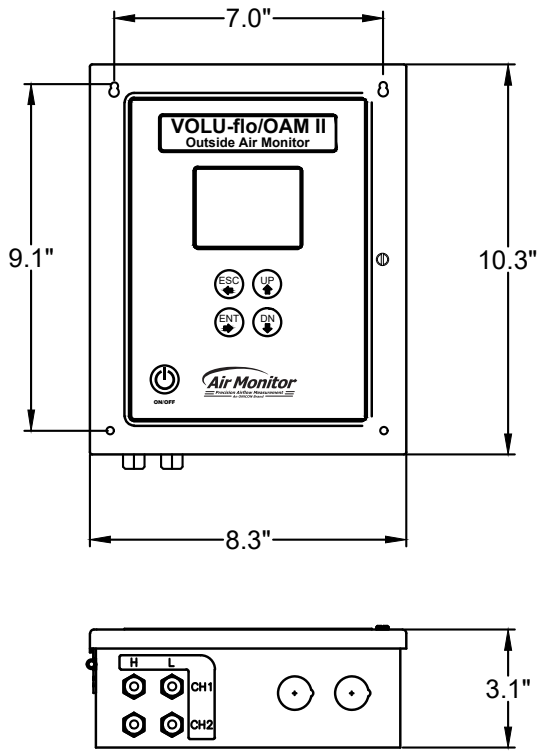

NEMA 1 Enclosure

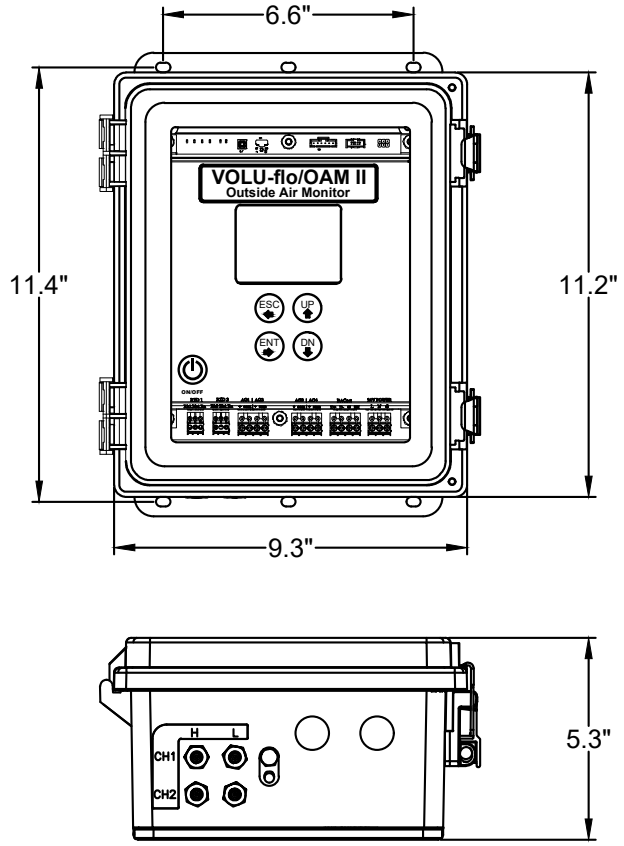

NEMA 4X Enclosure

2.1.3 Transmitter Installation

Find an easily accessible location where electrical connections can be made and display readings can be taken from the floor level. The mounting surface must be structurally sound and capable of withstanding a minimum weight of 40lbs (18kg). Use the following screws for mounting.

For NEMA 1 Enclosure:
(4) Machine screws - #8-32 x 1.5″
(4) Wood screws - #8 x 1.5″
(4) Concrete screws - 3⁄16″ x 1.5″

For NEMA 4X Enclosure:
(4) Machine screws - HHMS .25-20 x 1.5″
(4) Wood screws - FHLS .25 x 1.5″
(4) Concrete screws - HHCS .25 x 1.5″

2.1.4 Transmitter Wiring Connections

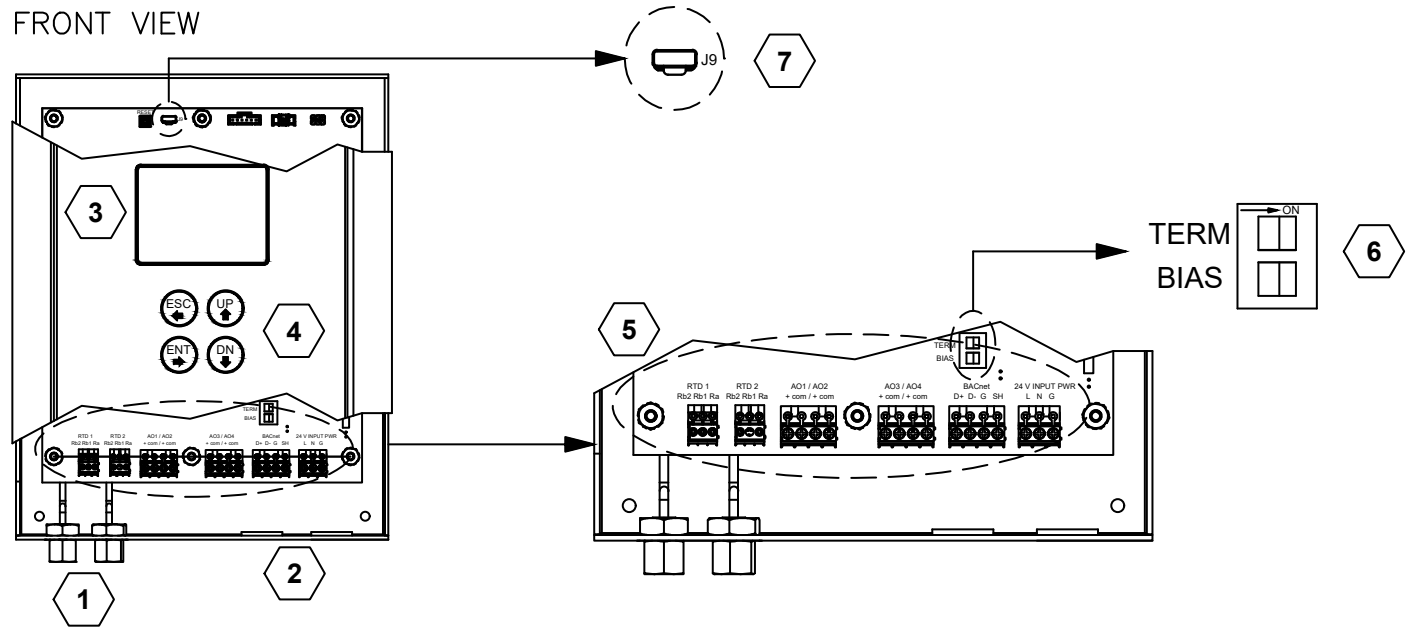

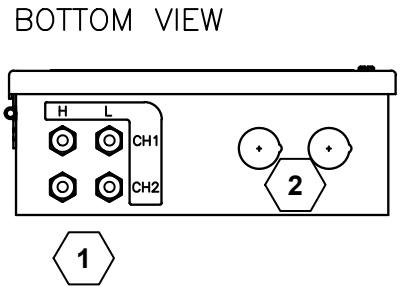

1. ⅛" FNPT connection, two (2) fittings per channel
2. Two (2) ½" conduit connection knockouts
3. Graphical LCD for user set-up, commissioning and real time data display
4. User programming and display keys
5. I/O, RTD and power input terminal block location. See page 14-23 for additional information
6. Termination resistor/bias switch location
7. Micro USB connection location

CAUTION
The electrical supply should be relatively clean, free of high frequency noise, large voltage transients, and protected from power surges and brown outs. Avoid installation locations that are in close proximity to strong sources of electrical interference.

2.1.4 Transmitter Wiring Connections (Continued)

A. Power/Signal Connections

Input Power Requirements:

- 24 VAC, 15VA @ 24 VAC, 40 VA with heater
- 24 VDC, 10W @ 24 VDC, 35W with heater

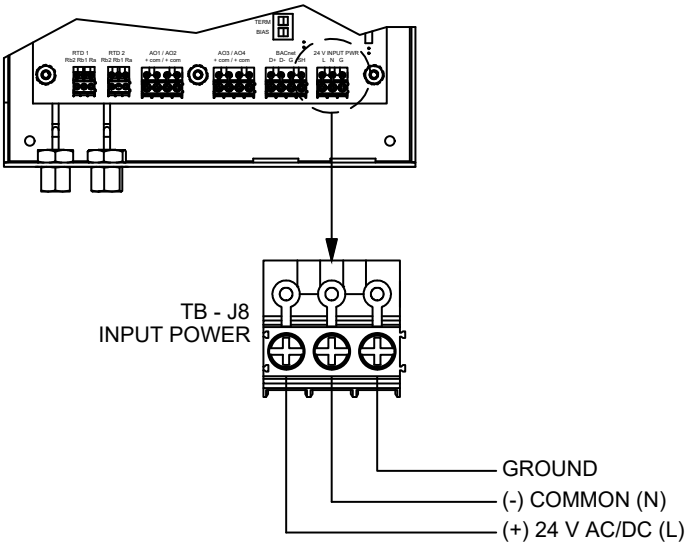

B. Analog Output & Serial Communication

Four (4) analog outputs (4-20 mA or 0-10 VDC) are available based on configuration. Refer to section 5.3 ANALOG OUTPUT CONFIGURATION for more information.

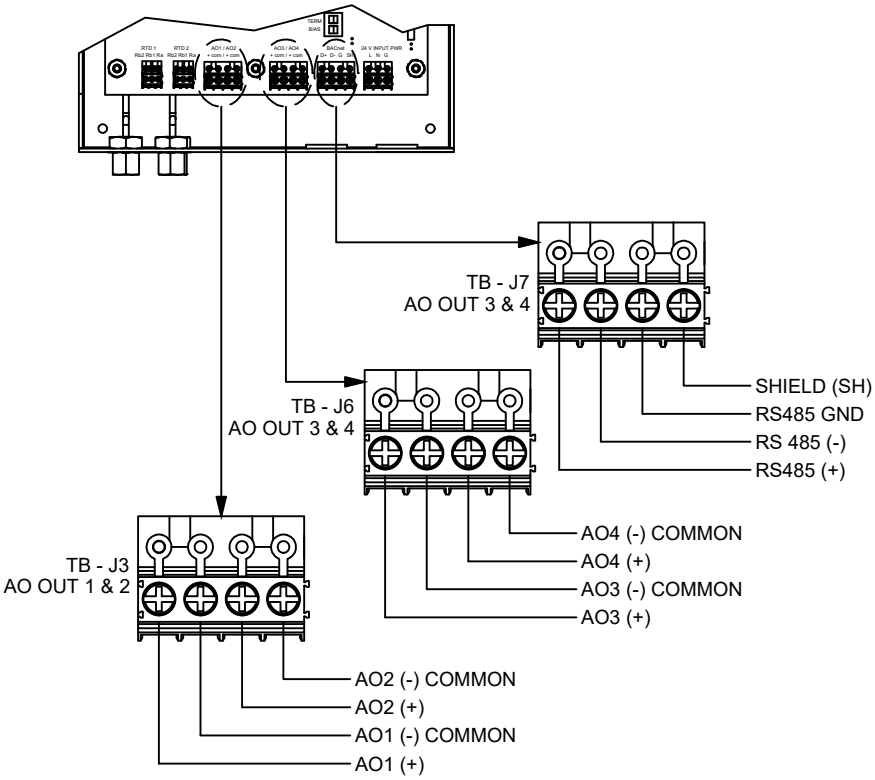

2.2 AIRFLOW SENSOR

Uni-sensors combine the outside reference (high pressure) sensor and the inlet airflow (low pressure) sensor into one assembly. They are provided with probe lengths that match the clearance requirements of the inlet where they will be installed.

Inlet Pressure Drop:
The graph below shows the required inlet total pressure drop.

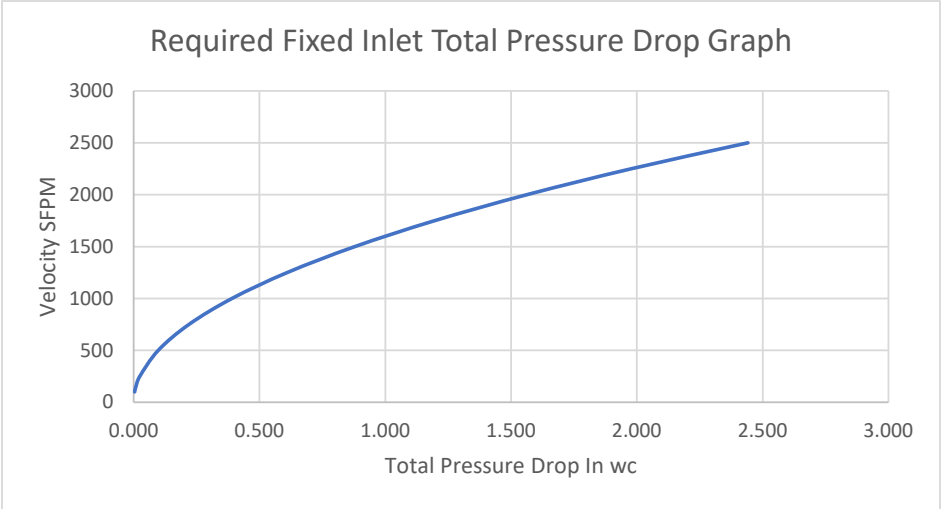

2.2.1 Uni-Sensor

Each OAM II is factory configured for one of three operating configurations. Each configuration is intended for use in specific applications. The number of uni-sensors required is based on the OAM II configuration and the installation type.

- Single channel systems will require one or more uni-sensors. Dual channel systems will require two or more uni-sensors with at least one sensor for each channel.
- In all cases, uni-sensors should be installed at / or near the center of the inlet. When using multiple sensors on a single inlet, space them by equal area apart (not equal distance) to ensure equal area coverage per sensor.
- Verify there are no obstructions within 2″ of the end of the Uni-Sensor
- When mounting the Uni-Sensor vertically, ensure the High Pressure port orientation is at the 12 o'clock position and the Low Pressure port at the 3 o'clock position.

2.2.2 Dimensional Specifications

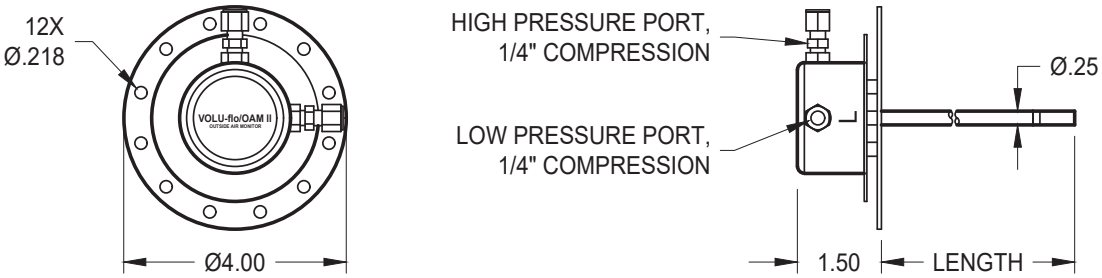

(Shown with 1/4″ compression fittings)

2.2.3 Airflow Sensor Installation

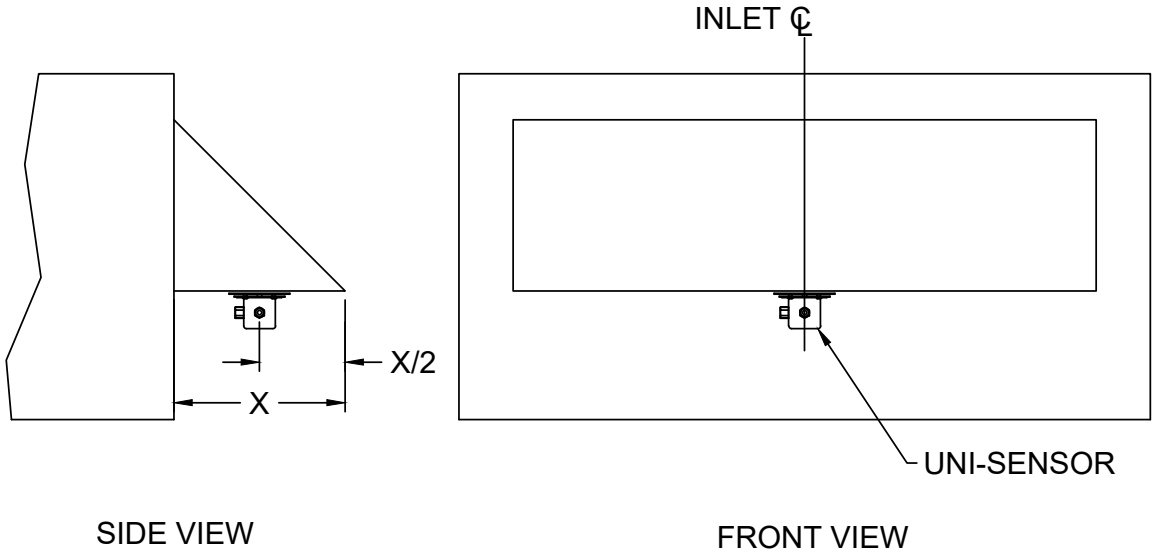

2.2.3.1 Moisture Prevention

In installations where the setup may be prone to moisture condensation in the lines, or when the uni-sensor is mounted horizontally (images in 2.2.3), a drip leg is recommended. An example is shown below.

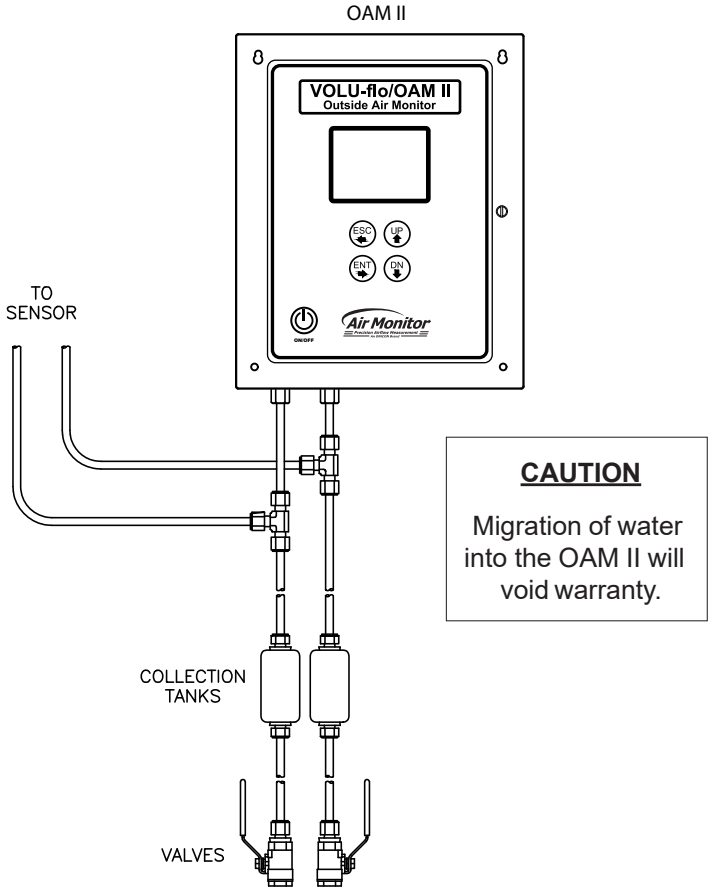

2.2.3.2 Louvered Inlets

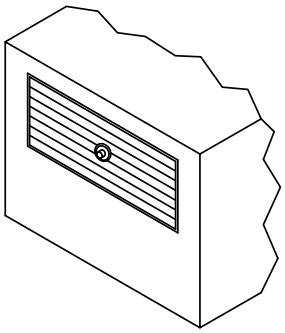

SINGLE LOUVER INLET
MIN AND/OR TOTAL OA

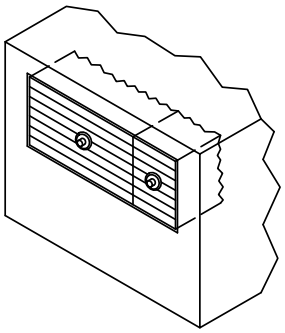

SPLIT LOUVER INLET
SEPARATE MIN & TOTAL OA

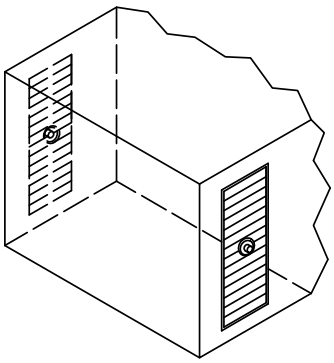

DUAL LOUVER INLET
MIN AND/OR TOTAL OA

The following recommendations should be observed to ensure accurate airflow measurements. Maintain a minimum clearance of 4″ between the louver and the edge of the damper blades when damper is fully open. The recommended distance between tip of the OAM II uni-sensor and the edge of the 100% open damper blade should be at least 2″. The louver depth will dictate the length of the uni-sensor probe (louver depth +2″).

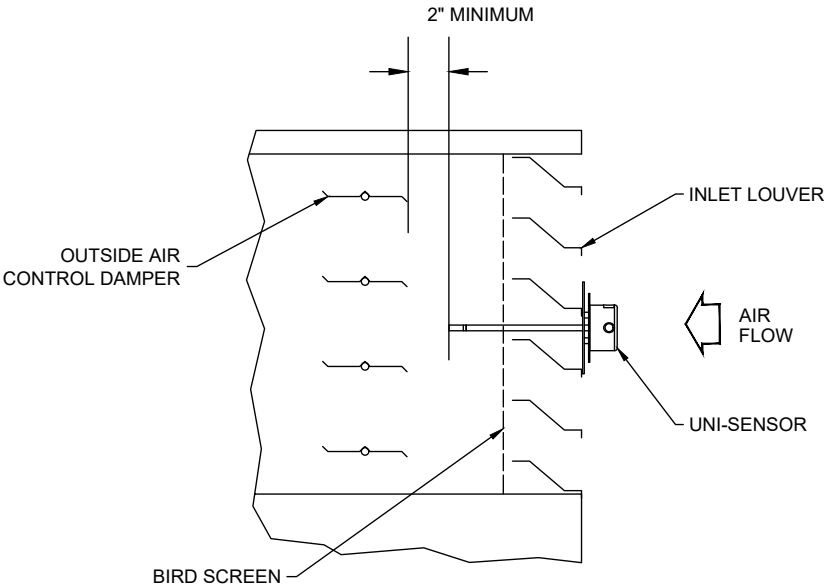

2.2.3.2 Louvered Inlets (Continued)

In order to use a louver, it must meet the inlet pressure drop shown in the graph on page 16.

Below is an example of a louver pressure drop graph. Refer to louver manufacturers data for their associated pressure drop curves.

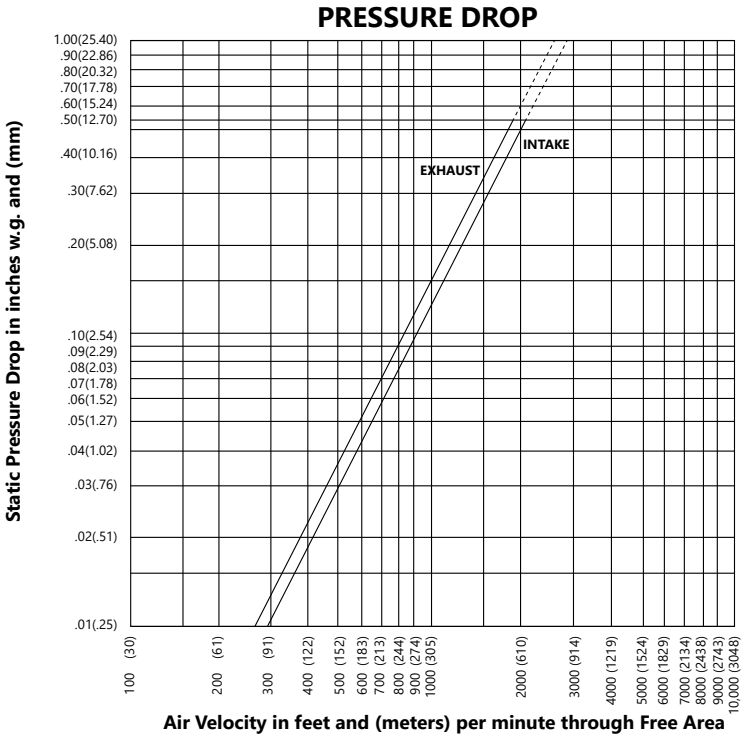

Ratings do not include the effect of a bird screen

2.2.3.3 Rain Hood Inlets

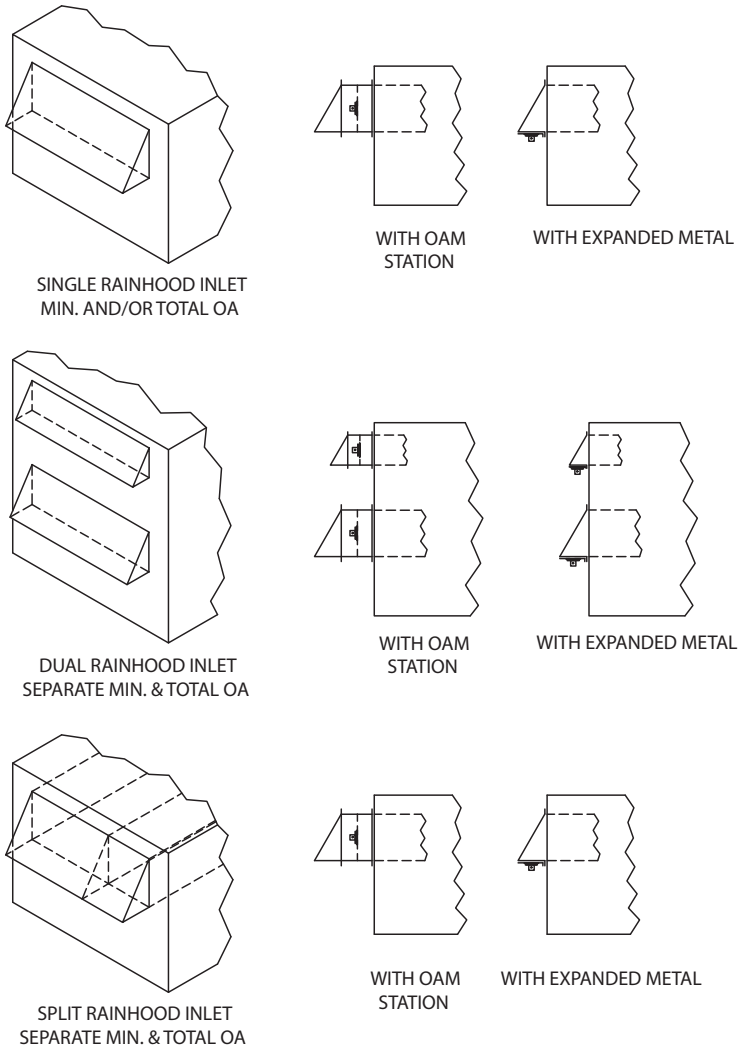

The use of Air Monitor's expanded metal is recommended for all non-louvered inlets.
For Min Outside Air and Economizer applications segment the inlets to prevent flow entering in from the other side which will impact the readings.

Air Monitor recommends the use of stainless steel sheet metal screws with washers to mount the expanded metal to the opening of an outside air rain hood intake or flanges of a duct opening. Please consult with your local mechanical contractor on using the appropriate fasteners.

IMPORTANT NOTE
Whenever possible, built-up systems should use expanded metal with 61% open (Free area) 0.048" thick, 0.304" short opening, 1.000" long opening. McNichols Metals 56ON121648 or equivalent.

2.2.3.4 Ducted Inlets

Expanded metal installed in ducts should be mounted between external duct flanges.
Nothing should be added in the ductwork that would create a disturbance to the airflow. The expanded metal should be oversized to allow fastening to occur outside of the duct. Typical expanded metal overall dimensions would be (L+2") X (W+2").

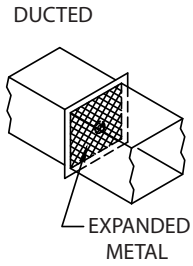

2.2.3.5 Multiple Inlets (OAM II transmitter in Single Mode)

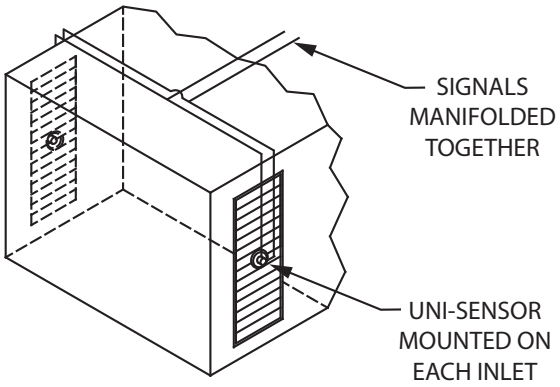

For best results, the area of each inlet should be the same and inlet dampers must operate in unison. Uni-sensors should be installed on each inlet and then connected via manifolds to provide averaged sensor signals to the transmitter.

2.2.3.6 Inlets with an Aspect Ratio > 6:1

Inlets with an aspect ratio > 6:1 require the use of multiple uni-sensors spaced at equidistant intervals. For example: A 2′ x 30′ louvered inlet has an aspect ratio of 15:1. Use three equally spaced sensors serving 2′ x 10′ areas to reduce the aspect ratio to 5:1 for each sensor. Uni-sensors must be connected via manifolds to provide averaged sensor signals to the transmitter.

2.2.3.7 Very Large Inlets

Inlets with an area > 30 ft^2 require the use of multiple uni-sensors spaced at equidistant intervals. For example: A 7′ x 12′ inlet would require three sensors with each sensor covering a 7′ x 4′ area. Uni-sensors must be connected via manifolds to provide averaged sensor signals to the transmitter.

2.2.4 Airflow Sensor Process Connections

Air Monitor recommends that signal tubing between the transmitter enclosure and all sensors be stainless steel or copper of the appropriate size. Use tees or manifolds to combine multiple sensors into single high and low pressure lines running to the transmitter's channel fittings for each channel.

UV resistant, flexible, plastic tubing specifically designed for outdoor use, such as Tygon R-3400 or equivalent, may also be used. Use brass inserts with the plastic tubing as required to ensure a leak free connection.

Refer to section 2.1.1 Site Selection to determine the proper tubing dimension required based on the distance between the transmitter and airflow sensor(s).

CAUTION
Flexible plastic signal tubing used in outdoor applications must be resistant to weathering and the effects of UV exposure. When installing or removing signal tubing from either the enclosure or the sensors, a wrench should be used on the bulkhead nut to prevent it from turning.

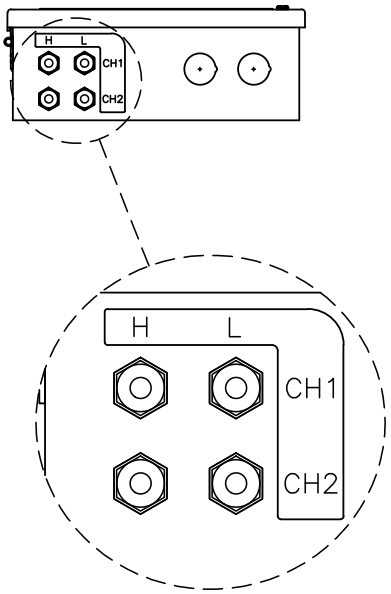

H - High Pressure Port, connects to "H" port on uni-sensor.
L - Low Pressure Port, connect to "L" port on uni-sensor.
CH1 / CH 2 - Ports associated with each channel.

2.3 AIRFLOW STATION

Airflow Stations (AFS) are built to order and provided fully assembled. The number of airflow sensors provided varies based on the size and shape of the station. When multiple OAM II stations are provided for a single system, only one temperature sensor (RTD) will be included.

2.3.1 Airflow Station Installation

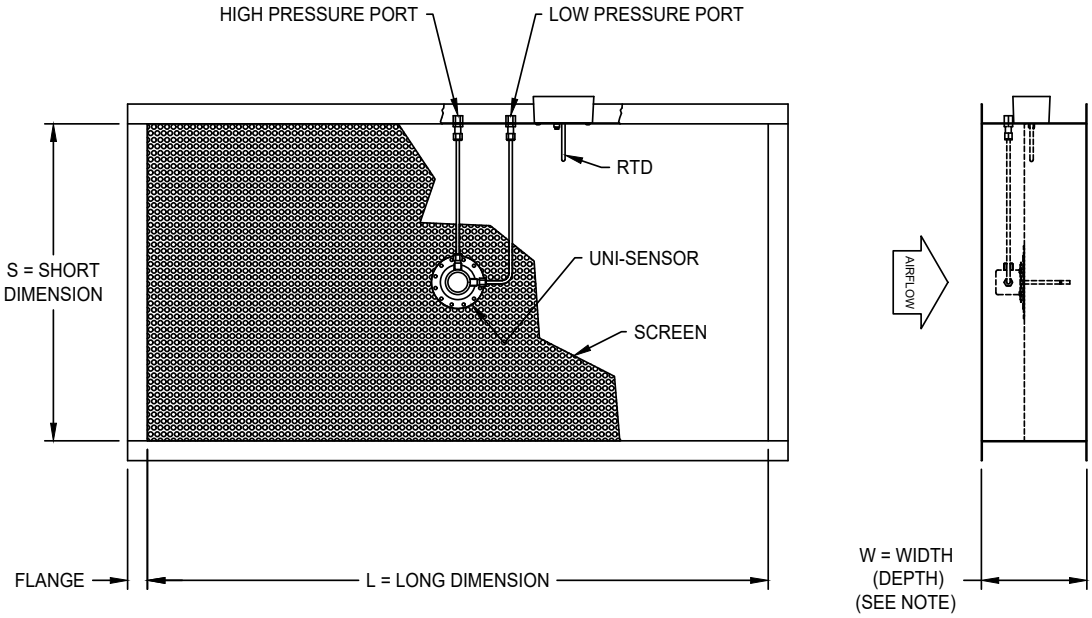

NOTE: If a damper is to be mounted immediately downstream of station, damper blades must not extend into casing. Select a longer 'W' dimension.

OAM II Airflow Station (shown with a single uni-sensor)

Pre-fabricated OAM II-AFS are built to order and delivered ready for installation in ductwork or attached to an inlet using hardware provide by the installer.

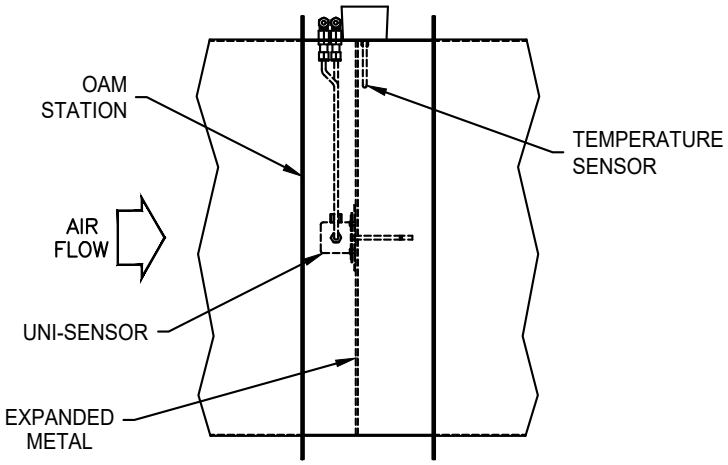

IMPORTANT NOTE
A temperature sensor is built into one of the OAM II stations.

2.3.1.1 Plenum Inlets

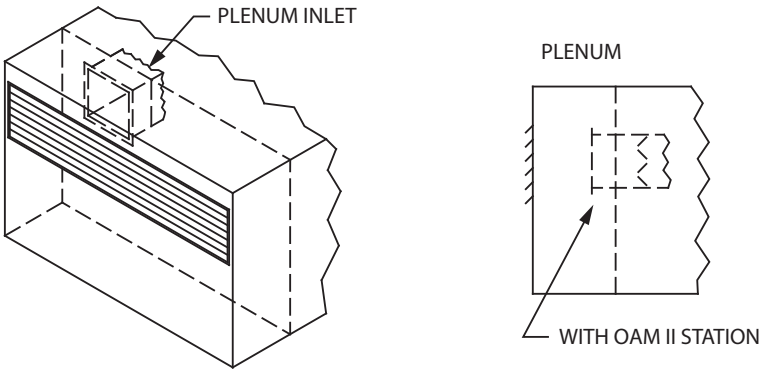

When installing an OAM II Station directly on an air handler's OA inlet that has damper blades extending outside the damper casing, there must be a minimum clearance of 4" between the screen and the edge of the damper blades when damper is fully open. The distance between tip of the OAM II uni-sensor and the edge of the 100% open damper blade should be at least 2".

2.3.1.2 Expanded Metal Installations

In order to install the uni-sensor in perforated metal one must open up a clearance area in the expanded metal to allow the uni-sensor low pressure port to slide through the expanded metal. To achieve this, it is recommended to snip the 'legs' of the expanded metal openings with tin snips to create a small opening for the uni-sensor.

2.4 TEMPERATURE SENSORS

Temperature sensors RTD(s) provide ambient air temperature for density correction calculations. When the OAM II is provided with a NEMA 1 enclosure, the sensor may be installed in the airflow stream or outside the inlet in a shaded area.

A single RTD is installed with each OAM II. Dual system transmitters will be provide with 2 RTDs, one for each channel.

The OAM II-AFS will be provided with an RTD pre-installed at the factory.

2.4.1 Temperature Sensors Installation

- Remove the RTD from the transmitter enclosure (taped in bag at bottom).
- Select a convenient mounting location(s) near the inlet or inside the air handler/duct to mount the RTD(s).
- Use the supplied sheet metal screws to mount the RTD(s).

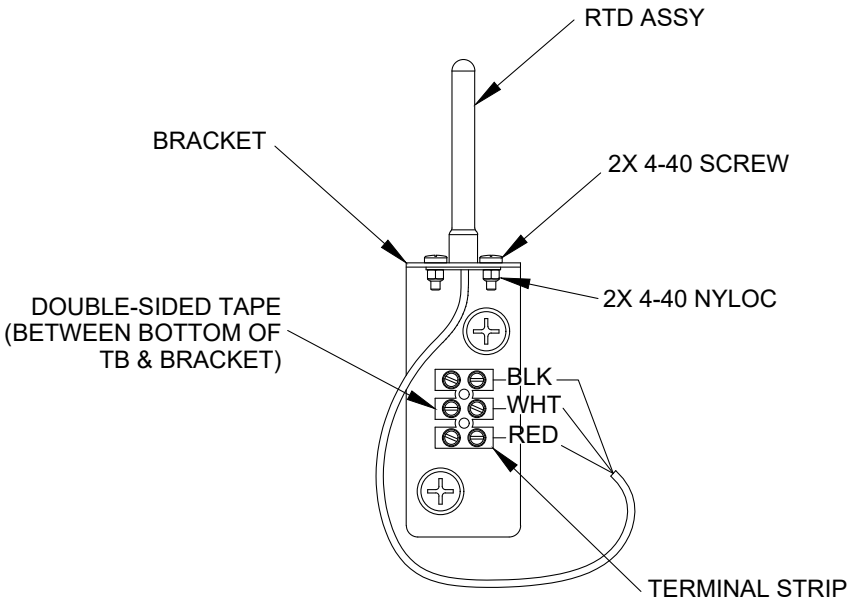

2.4.2 Temperature Sensor (RTD) Input Connections

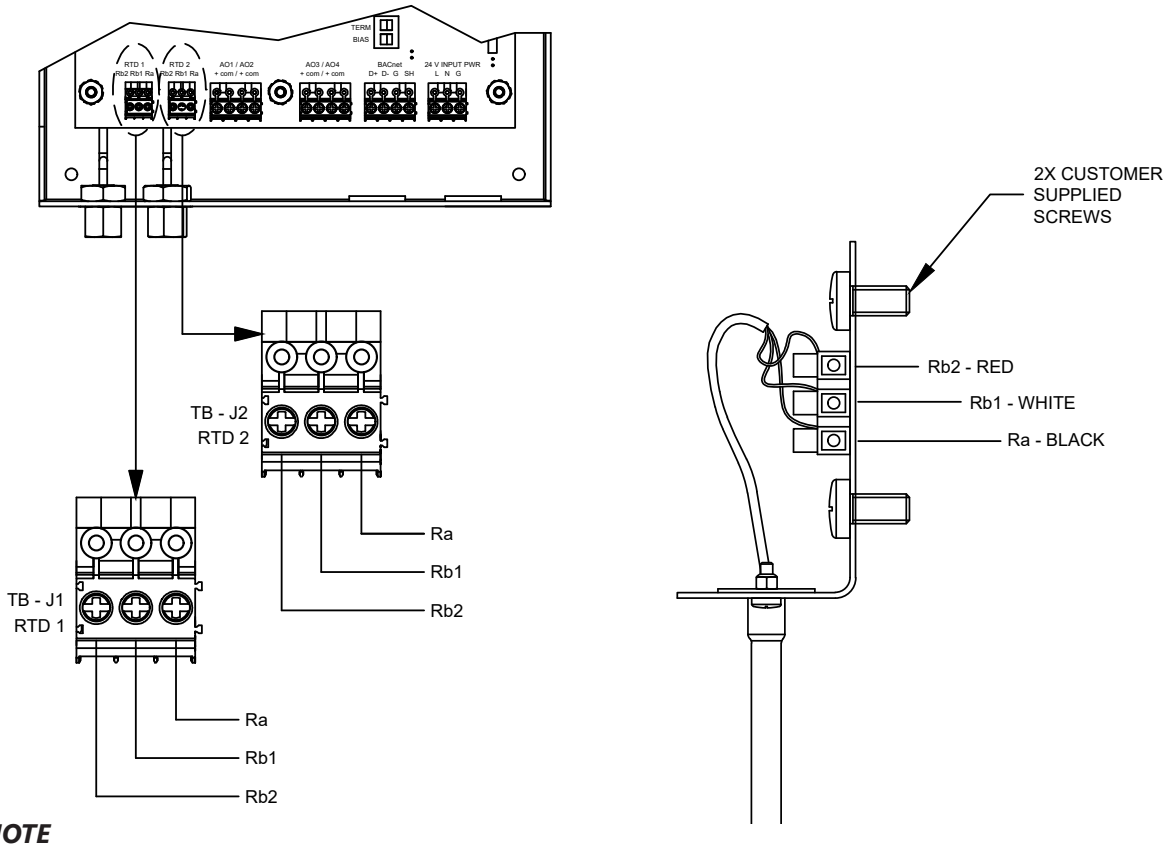

IMPORTANT NOTE
Never mount temperature sensors in direct sunlight.

SECTION 3.0 OPERATION

3.1 START-UP

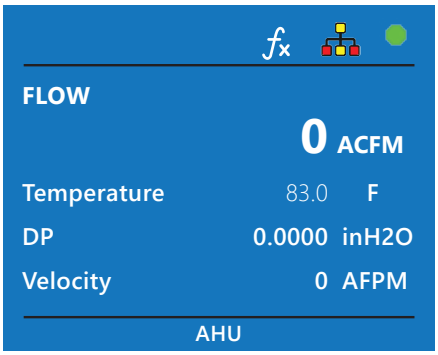

Example of The Main Display for Single System

Press the power button located in the lower left corner of the cover. You will see the current version of the software and the company logo displayed at power-up.

Flow data will be displayed after a brief pause. Information shown on this screen (flow, temperature, velocity, etc.) will vary based on the OAM II operating configuration. In addition, system status data is provided at the top of the display window and the user defined locations tag is displayed at the bottom.

For Single Channel, Single System:

Line 1 is for Flow
Line 2 can display Velocity/Temperature/DP/Absolute pressure/Velocity Std.
Line 3 can display Velocity/Temperature/DP/Absolute pressure/Velocity Std.
Line 4 can display Velocity/Temperature/DP/Absolute pressure/Velocity Std/None

For Min/Economizer (split):

Line 1 is for Total Flow
Line 2 can display Flow Min/Velocity Min/DP Min/Min Vel Std/ None
Line 3 can display Flow Econ/Velocity Econ/DP Econ/Econ VelStd/None
Line 4 can display Temperature/Absolute Pressure or None

For Dual Channel, Dual System:

Line 1 is for channel 1 Flow/Flow Add (channel 1 + channel 2)/Velocity Std
Line 2 can display Velocity/Temperature/DP/Abs Pressure/Velocity Std/None
Line 3 is for channel 2 Flow/Flow Subt (channel 1 - channel 2)/Velocity Std/None
Line 4 can display Velocity/Temperature/DP/Abs Pressure/Velocity Std/None

3.2 CONFIGURATION

The user interface consists of 4 push-buttons used for programming the transmitter. The displayed information is dependent on the factory configuration of the OAM II. The transmitter configurations are:

Single Channel, Single System – Two transducers in series (stacked) to extend the range

Min/Economizer (split) – Two pairs of transducers in parallel to allow for two different ranges to be blended to a single flow

Dual Channel, Dual System – Two pairs of transducers are physically in the same transmitter but monitor separate ducts and work autonomously from each other

Push-button Definitions:

Button	In an Editable Field	In a Selectable Field
ENT	Press once to select next character Press twice to enter the value and go to the next field	To select the value and go to the next field
ESC	Press once to delete the character to the left	Exits the menu, discards change
UP	Selects the next character (Note: Some fields support alpha or numeric or both)	Selects the next item in the list (Note: Once at the top of the list, this button has no effect)
DN	Selects the next character (Note: Some fields support alpha or numeric or both)	Selects the next item in the list (Note: Once at the bottom of the list, this button has no effect)

3.3 STATUS BAR

An upper status bar is always displayed indicating the general operational status of the transmitter. Messages will be displayed on the left side of the bar and icons will be displayed on the right.

Message	Description
Max Flow exceeded	Flow rate exceeds the design max flow setting
Full Scale OOR	The full scale flow range is Out Of Range
RTD OOR	The RTD temperature is Out Of Range

Icon	Description
	BACnet or Modbus is enabled
	Field Characterization enabled (red when there is an error)
	Field Characterization enabled for both channels
	Run mode is active

3.4 ENTERING THE PROGRAMMING MENUS

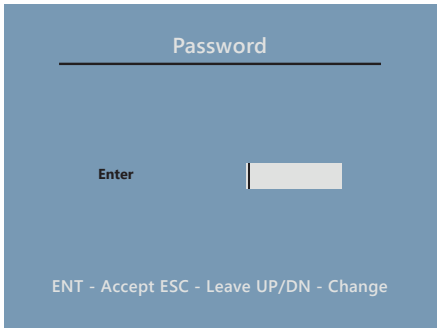

Press ENT at any time to access the programming menus. If the password has been set previously, the following screens will be displayed.

Password Menu

Enter the password and you will be brought to the menus selection screen. Information regarding the password settings can be found in section 4.4 SET PASSWORD.

Single

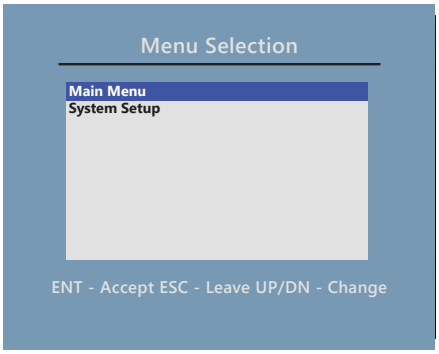

This screen provides menu selection for Single Channel, Single System Configuration.

Split

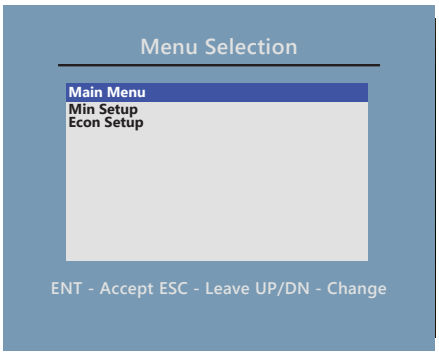

This screen provides menu selection for Min/Economizer (Split) Configuration.

Dual

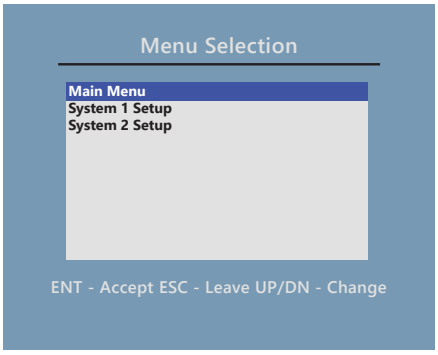

This screen provides menu selection for Dual Channel, Dual System Configuration.

SECTION 4.0 MAIN MENU

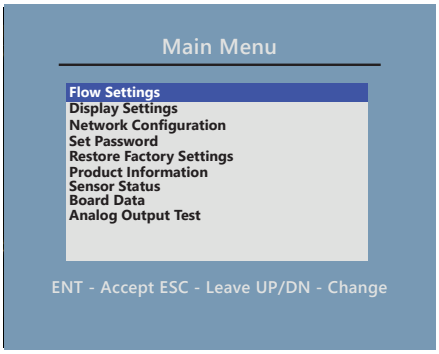

Main menu functions are used to configure transmitter settings common to all configurations.

4.1 FLOW SETTINGS

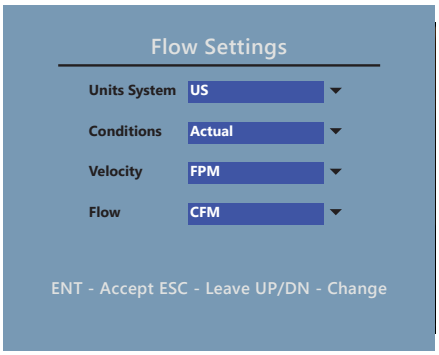

Flow settings will set the engineering units for the whole system. You cannot individually change units on other menu pages; for example, if you set the units to be in US and the velocity to be in FPM, the lockdown (low flow cut-off) settings will be in FPM.

Actual Conditions –
The transmitter calculates airflow volume based on the current temperature and atmospheric pressure.

Standard Conditions –
The transmitter calculates airflow volume based on 68°F and 29.29” Hg.

4.2 DISPLAY SETTINGS

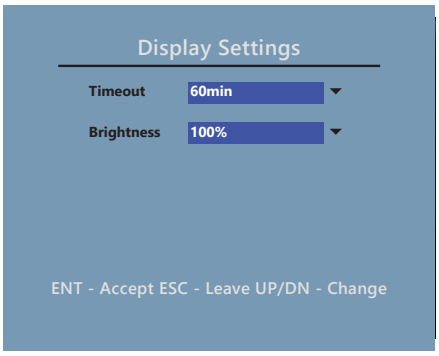

This menu provides adjustment for the display.

Time Out -
This refers to the time the menu system stays active. If the user leaves the system on a menu screen, it will eventually time out and return to the main display.

Brightness -
This is a real-time control of the LCD backlight. Selecting a value will immediately cause a change to the brightness.

4.3 NETWORK CONFIGURATION

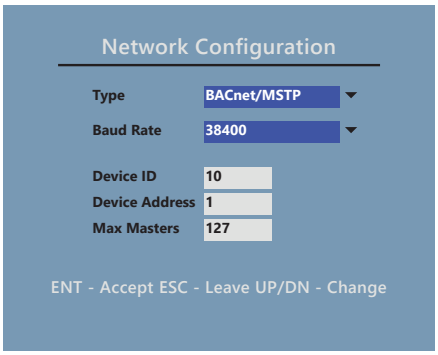

This menu allows the user to set up the serial communications network. It can be used to configure the device for BACnet MS/TP or MODBUS RTU networks. When the network is enabled, the user will see the following icon next to the "System Run" indicator.

Network Type - BACnet Settings
Baud Rate - Available in 9600/19200/38400/56700/76800/115200
Device ID (Instance Number) - Enter a value between 0 – 4,194,303
Device Address - Enter an address between 0 – 127
Max Masters - Enter a number between 0 – 127

Network Type – MODBUS Settings
Baud Rate - Available in 9600/19200/38400/56700/76800/115200
Device Address - Enter an address between 1 – 254
Parity - Select from EVEN, ODD or NONE

4.4 SET PASSWORD

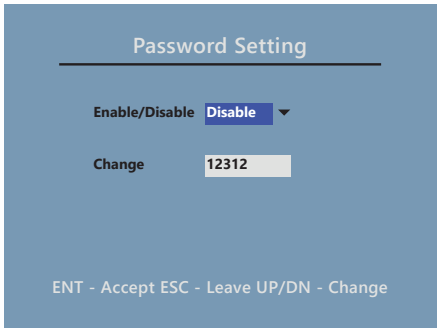

To change the password, enter your new password into the editable field. This overwrites the old password. The password can be up to 8 digits. Alpha and numeric characters are supported. The drop down will allow the user to disable the password if so desired.

4.5 RESTORE FACTORY SETTINGS

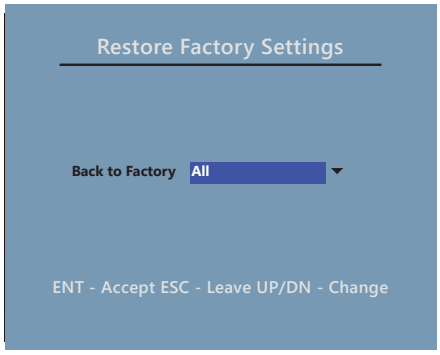

This menu allows the user to return the system back to the factory settings.

Options for restoring settings include:

- All
- Other duct coefficients
- Display
- Analog outputs
- Flow settings
- Flow configuration

4.6 PRODUCT INFORMATION

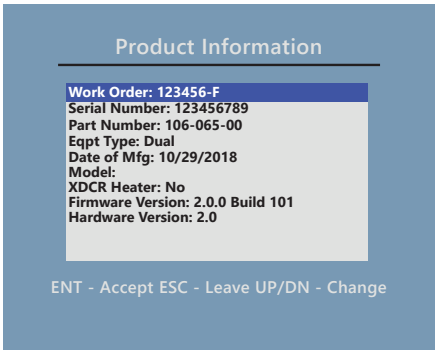

This screen provides detailed information about the transmitter hardware.

4.7 SENSOR STATUS

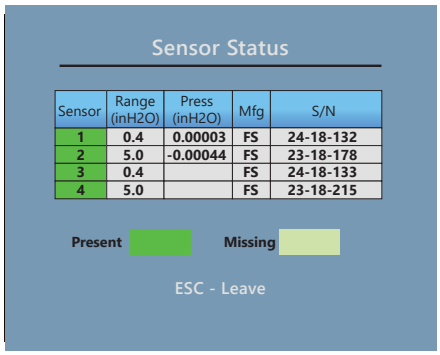

This screen provides real-time operating status for the pressure transducers.

4.8 BOARD DATA

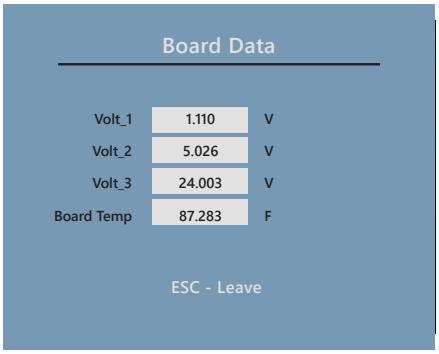

This screen provides real-time operating information for the transmitter electronics.

4.9 ANALOG OUTPUT TEST

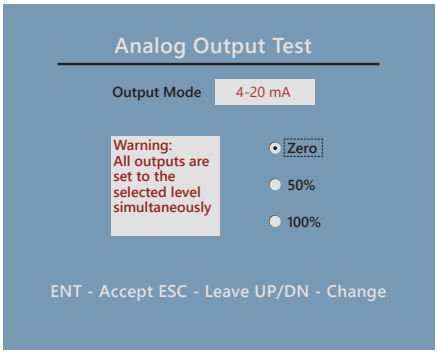

This function allows the user to test the analog outputs. The user can force the outputs to operate at 0%, 50% or 100%.

SECTION 5.0 SYSTEM SET-UP MENU

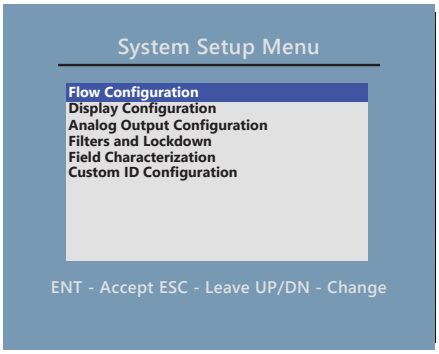

System set-up menu functions are specific to the operating channel(s).

5.1 FLOW CONFIGURATION

Single

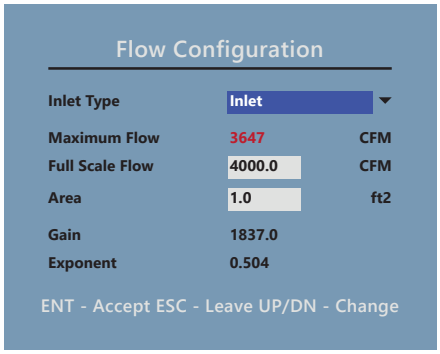

This menu is used to select the flow inlet type and adjust the flow settings.

Inlet Type
The inlet type is selected by the user based on the installation. The options are:

- Ducted
- Inlet
- Other

Each selection corresponds to a default gain and exponent used to calculate flow. If the user selects “Other”, a default gain of 1234.0 and an exponent of 0.497 is used. This can be changed based on the field characterization which is discussed later in this document.

Maximum Flow
This is the upper flow limit based on the installed transducers. The Full Scale Flow setting cannot exceed this value.

Full Scale Flow
This is the full scale flow setting. The user should set this value to a range that spans the expected airflow for the duct or inlet. This value will set the span for the analog output. For example, if the Full Scale Flow is set to 2000 and the actual flow is 1000, the analog output will indicate 50% of scale.

Area
This is an editable field that defines the area used to calculate airflow volume. It is important for the user to make sure this is accurately entered so the system flow value is also accurate.

Gain and Exponent
These are read-only fields to indicate what the gain and exponent is in the system. These values will change if field characterization is turned on and the calculation modifies these values.

5.1 FLOW CONFIGURATION (CONTINUED)

Dual

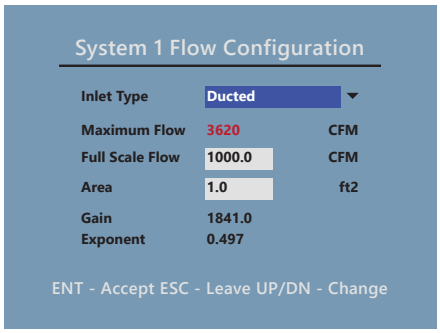

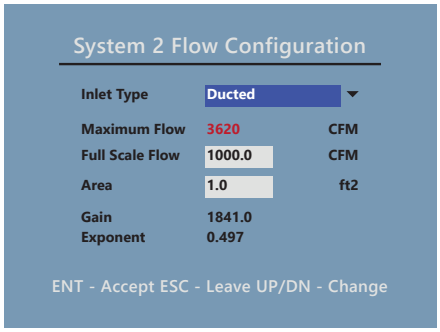

The separate inlets for Dual and Split Min/Max are shown in the menu pages to the left. Each inlet is configurable in the same way as described above for the single channel configuration.

Split

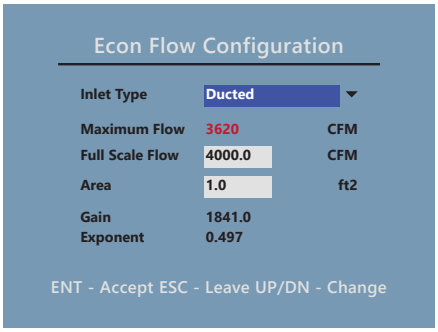

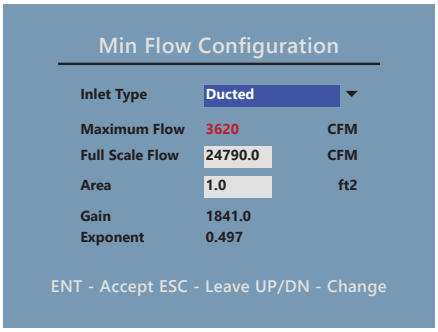

5.2 DISPLAY CONFIGURATION

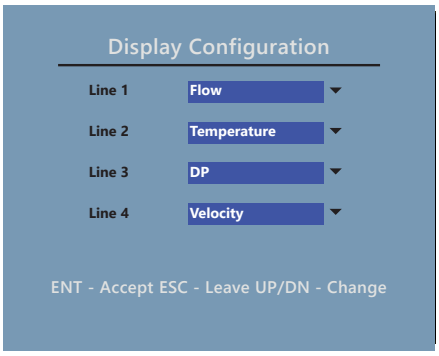

Single Channel, Single System:

Line 1 is Flow
Line 2 can display Velocity/Temperature/DP/Absolute pressure/Velocity Std.
Line 3 can display Velocity/Temperature/DP/Absolute pressure/Velocity Std.
Line 4 can display Velocity/Temperature/DP/Absolute pressure/Velocity Std/None

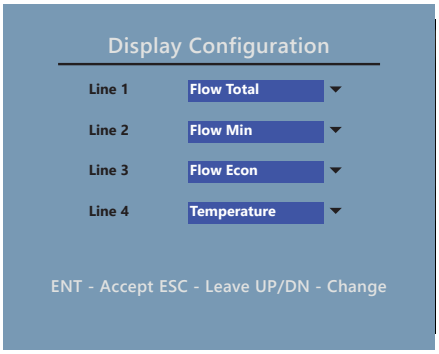

For Min/Economizer (split):

Line 1 is for Total Flow
Line 2 can display Flow Min/Velocity Min/DP Min/Min Vel Std/ None
Line 3 can display Flow Econ/Velocity Econ/DP Econ/Econ VelStd/None
Line 4 can display Temperature/Absolute Pressure or None

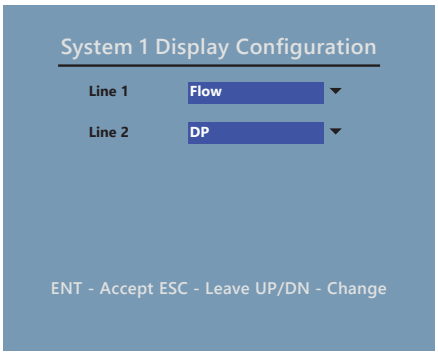

For Dual Channel, Dual System:

Line 1 is for channel 1 Flow/Flow Add (channel 1 + channel 2)/Velocity Std
Line 2 can display Velocity/Temperature/DP/Abs Pressure/Velocity Std/None
Line 3 is for channel 2 Flow/Flow Subt (channel 1 - channel 2)/Velocity Std/None
Line 4 can display Velocity/Temperature/DP/Abs Pressure/Velocity Std/None

5.3 ANALOG OUTPUT CONFIGURATION

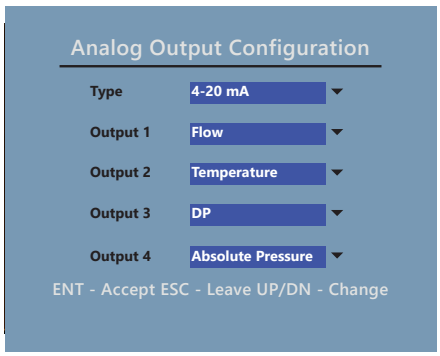

This menu is used to configure the analog outputs. In split and dual modes the outputs are assigned to the specific channels.

Output Type
Use this to configure the output type. The options are 4-20mA, 0-10VDC, 0-5VDC or off. All four outputs are set to the same type.

Output 1
Single – Flow
Split – Total Flow
Dual – Flow for channel 1 or Flow Add (channel 1 + channel 2)

Output 2
Single – DP/Temperature*
Split – Min Flow/Min DP/Temperature*
Dual – DP or Temperature for channel 1

Output 3
Single – DP/Temperature*
Split – ECON Flow/Econ DP/Temperature*
Dual – Flow for channel 2 or Flow Subt (channel 1 - channel 2)

Output 4
Single – Absolute Pressure
Split – Temperature*/Absolute Pressure
Dual – DP or Temperature* for channel 2

The analog temperature output range is fixed at the factory, -40°F to 120°F

5.4 FILTERS AND LOCKDOWN

Single

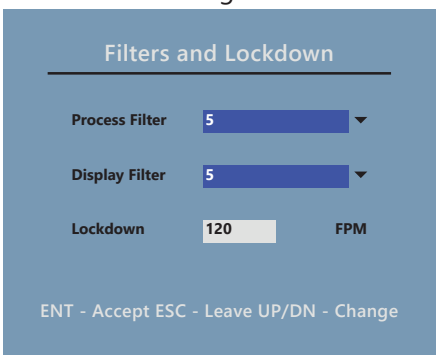

Split

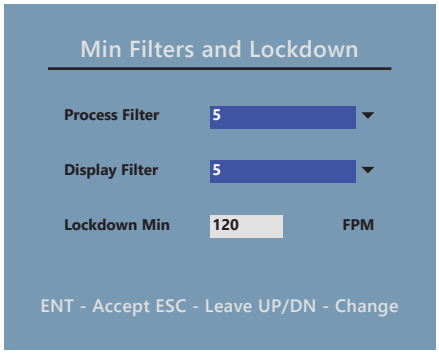

Dual

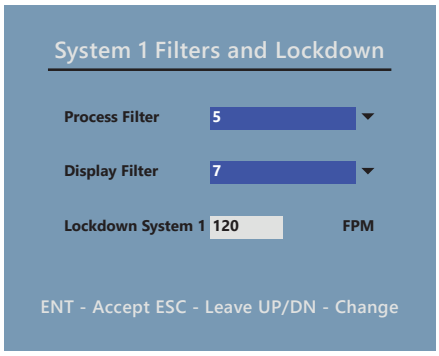

This menu function sets filtering for the analog outputs and the display. It is also used to set the lockdown (low flow cut-off).

Process Filter
The process filter is used to dampen the analog outputs. The settings are from 1-10, where 1 is the softest filter and 10 is the hardest filter. Typically, 2-4 will give a filtered signal which is responsive but provides some dampening.

Display Filter
This filter is used to dampen the flow display. The settings are from 1-10, where 1 is the softest filter and 10 is the hardest filter. Typically, 2-4 will give a filtered signal which is responsive but provides some dampening.

Lockdown Setting
The lockdown setting is a low flow cut-off. It is set in velocity units which are carried over from the Flow Settings menu page. This setting applies to the relevant inlet or duct, depending on configuration.

5.5 FIELD CHARACTERIZATION

Field characterization is the process whereby the user alters the factory calibration based on the field reference device readings taken under installed conditions. If done correctly, this process can improve the overall performance of the OAM II, particularly when something other than the expanded metal provided by Air Monitor is installed across the inlet or duct.

For best results, Air Monitor recommends at least 2 velocity points be used to characterize the installation, with one velocity reading taken in the bottom 1/3 of the operating range. When making this measurement, it is essential that the velocity measurement be within the operating range of the OAM II system. This range is 150 to 3000 SFPM. Note that the range is stated in standard feet per minute. This is necessary to account for variations in altitude and temperature at different installation locations.

The OAM II can simultaneously display flow velocity in actual and standard conditions. Before anemometer readings are taken, temporarily reconfigure the display to show both velocity readings and make sure the airflow velocity exceeds 150 SFPM before any anemometer readings are taken.

The OAM II will not accept field characterization velocity readings below 150 or above 3000 SFPM.

5.5 FIELD CHARACTERIZATION (CONTINUED)

Single

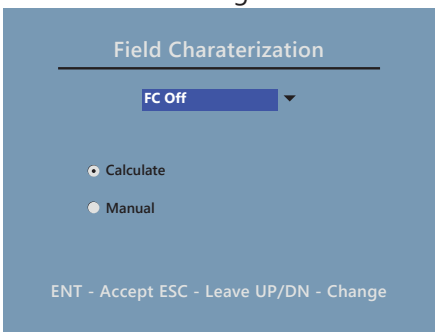

Split

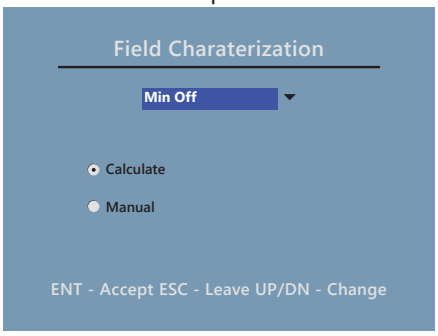

Dual

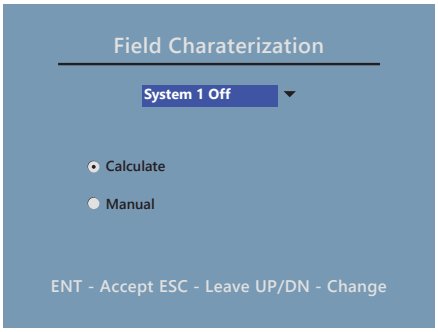

This menu allows the user to field characterize (FC) system flow and adjust the factory calibration parameters in the OAM II. When FC is enabled, the icon shown below appears in the status bar of the main display. When operating in Split or Dual mode, there may be two icons shown indicating that both inlets have been characterized.

Field Characterization has been turned on

Each mode has slightly different settings, as shown below. When operating in Single mode, FC has a single drop down option to enable or disable FC. When operating in Split or Dual modes, the options change to allow for separate characterization of each inlet. In Split mode, the options change to Min On/Min Off and ECON On/ECON Off. In Dual mode, the options are System1 On/Off and System2 On/Off.

If you enable the field characterization you will be advanced to the Calculate radio button. Press the ENT key again and you will enter this menu. This menu is used for all modes other than Split or Dual mode. In Split or Dual mode the menu is used only for the selected inlet.

Number of Points
Allows the user to select the number of points.

Data Points
There are two columns shown on the menu; one for Reference (the test and balancer results) and one for OAM II Points. Data is stored in the system's non-volatile memory. The following are general guidelines characterizing flow based on the number of data points.

IMPORTANT NOTE
Data must be entered as velocity (e.g. FPM) in actual, not standard, flow conditions.

5.5 FIELD CHARACTERIZATION (CONTINUED)

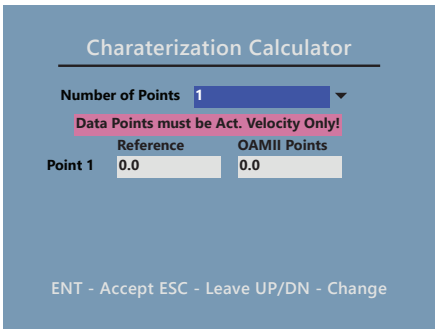

1 Point - Enter a flow velocity that is at or near the top of the operating range.

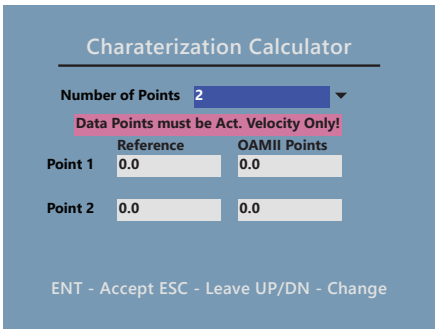

2 Points - For point 1, enter a flow velocity value that is near the bottom of the operating range. For point 2, enter a flow velocity value that is near the top of the operating range.

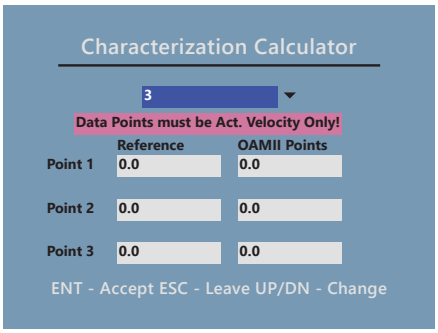

3 Points - For point 1, enter a flow velocity value that is in the bottom third of the operating range. For point 2, enter a flow velocity value that is in the middle third of the operating range. For point 3, enter a flow velocity value that is in the upper third of the operating range.

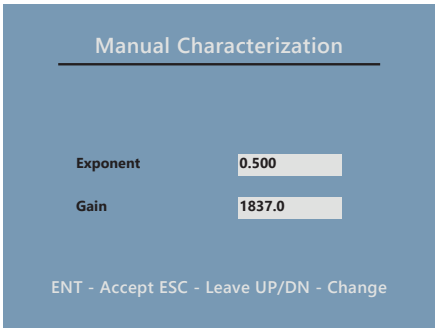

If you select the manual radio button on the filed characterization menu, you will be provided with data entry fields for manually entering exponent and gain values.

5.6 CUSTOM ID CONFIGURATION

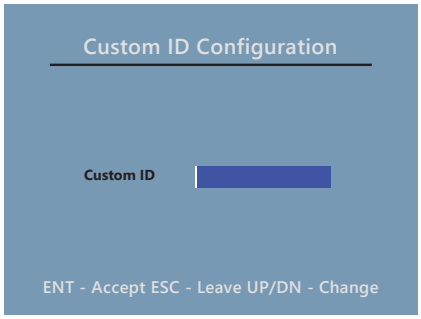

This dialog allows for a alpha-numeric entry of up to 20 characters. This entry is visible on the bottom of the main display screen and is written to the Device Name field in the BACnet device object.

SECTION 6.0 COMMUNICATIONS

The OAM II is provided with BACnet MS/TP and MODBUS RTU as serial communications protocol options. BACnet is the default setting. The field configurable serial communications interface is described on the following pages. Refer to section 2.1.4 Transmitter Wiring Connections for detailed information on wiring connections.

Air Monitor recommends that 3-wire systems with a separate shield be used for communications. The interface can operate on 2-wire networks with no common, but this configuration is more susceptible to noise.

CAUTION
Do not connect shield drains to the common terminal.

6.1 BACnet MS/TP

Transceiver	Isolated, 3-wire, half-duplex (⅓ unit load)
Recommended maximum units per segment	32
BACnet address range	1 - 255
BACnet device ID (Instance number)	0 – 4,194,303
Max master range	0 – 127
Baud rate	9600, 19200, 38400, 57600, 76800 or 115200

6.1.1 BACnet Object Types

BACnet Object Type and Number of Objects implemented: Device 1
Analog Input – 5, 9 or 11 depending on operating configuration See below for details.

6.1.2 Protocol Implementation Statement

BACnet Protocol Revision: 12
Device Profile (Annex L): BACnet Application Specific Controller (B-ASC)
MS/TP Master (Clause 9), Baud Rate(s): 9600, 19200, 38400, 56700, 76800, 115200
Device Address Binding: No
BBMD Support Registration By Foreign Devices: No
Character Set Supported: ANSI X3.4
BACnet Interoperability Building Blocks Supported (Annex K):
Data Sharing – Read Property-B (DS-RP-B)
Data Sharing – Read Property Multiple-B (DS-RPM-B)
Data Sharing – Write Property-B (DS-WP-B)
Device Management – Dynamic Device Binding-B (DM-DDB-B)
Device Management – Dynamic Object Binding-B (DM-DOB-B)
Device Management – Device Communication Control-B (DM-DCC-B)
Device Management – Reinitialize Device-B (DM-RD-B)

6.1.3 Standard BACnet Objects Supported

Object Identifier	1	Writeable	0 – 4,194,303
Object Name	OAM-II	Writeable	Alpha-numeric; 20 character limits. See "Custom ID" setting in the Service Menu.
Object Type	Device	Read-only	
System Status	Operational	Read-only	
Vendor Name	Air Monitor Corporation	Read-only	
Vendor ID	58	Read-only	
Model Name	OAM-II	Read-only	
Location	Default Location	Read-only	
Description	Airflow Measurement	Read-only	
Protocol Version	1	Read-only	
Protocol Revision	12	Read-only	
Services Supported	readProperty, readPropertyMultiple, writeProperty, deviceCommunicationControl, reinitilizeDevice, who-Has, who-is	Read-only	
Object Types Supported	Analog-input, Device	Read-only	
Object List	See Tables Below (Section 6.1.4)	Read-only	
Max ADPU Length	128	Read-only	
Segmentation Supported	No Segmentation	Read-only	
APDU Time-out	3000	Read-only	
# of APDU Retries	3	Read-only	
Max Master	127	Writeable	
Device Address Binding	{}	Read-only	
Database Revision	3	Read-only	

6.1.4 BACnet Analog Inputs

Single

Object Name	Description	Units
Analog 1	Total Flow	Cubic Feet Per Minute
Analog 2	D.P.	Inches of Water
Analog 3	Temperature	Degrees Fahrenheit
Analog 4	Velocity	Feet Per Minute
Analog 5	Velocity Std	Feet Per Minute
Analog 6	Abs. Pressure	Inches of Mercury

Dual Channel, Split System

Object Name	Description	Units
Analog 1	Total Flow	Cubic Feet Per Minute
Analog 2	Flow Min	Cubic Feet Per Minute
Analog 3	D.P. Min	Inches of Water
Analog 4	Velocity Min	Feet Per Minute
Analog 5	Velocity Min Std	Feet Per Minute
Analog 6	Flow Econ	Cubic Feet Per Minute
Analog 7	D.P. Econ	Inches of Water
Analog 8	Velocity Econ	Feet Per Minute
Analog 9	Velocity Econ Std	Feet Per Minute
Analog 10	Temperature	Degrees Fahrenheit
Analog 11	Abs. Pressure	Inches of Mercury

Dual Channel, Dual System

Object Name	Description	Units
Analog 1	Total Flow Sys 1	Cubic Feet Per Minute
Analog 2	Flow Total Plus	Cubic Feet Per Minute
Analog 3	D.P. Sys1	Inches of Water
Analog 4	Temperature Sys1	Degrees Fahrenheit
Analog 5	Velocity Sys1	Feet Per Minute
Analog 6	Velocity Std1	Feet Per Minute
Analog 7	Abs. Pressure	Inches of Mercury
Analog 8	Total Flow Sys2	Cubic Feet Per Minute
Analog 9	Total Flow Minus	Cubic Feet Per Minute
Analog 10	D.P. Sys2	Inches of Water
Analog 11	Temperature Sys2	Degrees Fahrenheit
Analog 12	Velocity Sys2	Feet Per Minute
Analog 13	Velocity Std2	Feet Per Minute

6.1.5 Analog Input Object

Object Identifier	Analog Input-0 to Analog Input-X1	Read-only
Object Name	Various	Read-only
Object Type	Analog-Input	Read-only
Present Value	REAL	Read-only
Status Flags	F, F, F, F	Read-only
Event State	Normal	Read-only
Out of Service	FALSE	Read-only
Description	Various	Read-only
Units	Various	Read-only

For each analog input object, there are four status flags: IN_ALARM, OUT_OF_SERVICE, FAULT and OVERRIDDEN. Only the FAULT flag is used in this product. If there is an out-of-range condition or other alarm, the FAULT flag will be set.

6.2 MODBUS RTU

Transceiver	Isolated, 3-wire, half-duplex (1/3 unit load)
Recommended maximum units per segment	32
Modbus address range	1 - 255
Parity	Even, Odd or None
Baud Rate	9600, 19200, 38400, 57600, 76800 or 115200

6.2.1 MODBUS Registers

Operating Mode	Register Description	Register Type	Address	Data Type
Single	Total Flow	Input register	30000	Floating point
Single	Differential Pressure	Input register	30002	Floating point
Single	Temperature	Input register	30004	Floating point
Single	Velocity	Input register	30006	Floating point
Single	Absolute pressure	Input register	30008	Floating point
Split Min/Max	Total flow	Input register	30000	Floating point
Split Min/Max	Minimum flow	Input register	30002	Floating point
Split Min/Max	Minimum differential pressure	Input register	30004	Floating point
Split Min/Max	Minimum velocity	Input register	30006	Floating point
Split Min/Max	Economy flow	Input register	30008	Floating point
Split Min/Max	Economy differential pressure	Input register	30010	Floating point
Split Min/Max	Economy velocity	Input register	30012	Floating point
Split Min/Max	Temperature	Input register	30014	Floating point
Split Min/Max	Absolute pressure	Input register	30016	Floating point
Dual	System1 flow	Input register	30000	Floating point
Dual	Flow addition (Sys1 + Sys2)	Input register	30002	Floating point
Dual	System 1 differential pressure	Input register	30004	Floating point
Dual	System 1 temperature	Input register	30006	Floating point
Dual	System 1 velocity	Input register	30008	Floating point
Dual	Absolute pressure	Input register	30010	Floating point
Dual	System2 flow	Input register	30012	Floating point
Dual	Flow subtraction (Sys1 - Sys2)	Input register	30014	Floating point
Dual	System 2 differential pressure	Input register	30016	Floating point
Dual	System 2 temperature	Input register	30018	Floating point
Dual	System 2 velocity	Input register	30020	Floating point

6.2.1 MODBUS Registers (Continued)

Description	Register Type	Address	Data Type	Description
System Velocity Units	Read Input	30201	uint16_t	1 = FPM, 2 = FPS, 3 = MPM, 4 =MPS
System Flow Units	Read Input	30202	uint16_t	1 = CFM, 2 = CFH, 3 = L/S, 4 = L/M, 5 = M3H
System Version	Read Input	30203	uint16_t	
System Version 2	Read Input	30204	uint16_t	MSB = Major, LSB = Minor
Duct / Inlet Type	Read Input	30205	uint16_t	1 = Ducted 2 = Inlet 3 = Other
Design Flow Min Setting	Read Input	30206	float	
Design Flow Max Setting (Std/Ext/Split Min/Dual System 1)	Read Input	30208	float	Max Flow to scale Analog Outputs
Design Flow Max Setting (Std/Ext/Split ECON/Dual System 2)	Read Input	30216	float	Max Flow to scale Analog Outputs
Duct Area (Std/Ext/Split Min/Dual System 1)	Read Input	30210	float	Duct area size in ft^2 or m^2
Duct Area (Std/Ext/Split Min/Dual System 2)	Read Input	30212	float	Duct area size in ft^2 or m^2
System Status	Read Input	30214		1= ALL_OK 2 = IN ALARM 3 = IN FAULT 4 = OOS
System Units	Read Discreet	20000	boolean	Bit 0: 1 = SI, Bit 0: 0 = US
System Conditions	Read Discreet	20001	boolean	Bit 0: 1 = Std, Bit 0: 0 = Actual
K-factor	Write Coil 1	50000	boolean	1 = ON, 0 = OFF
System Reset	Write Coil 2	50000	boolean	1 = RESET
K-factor	Write Multiple Coil	150000	boolean	1 = ON, 0 = OFF
System Reset	Write Multiple Coil	150000	boolean	1 = RESET
Read Slave ID	N/A	17000	ASCII	Returns string "OAMII"
K-factor	Read Coil	10000		Returns the state of the K-factor

SECTION 7.0 MAINTENANCE

The OAM II does not contain any parts that require scheduled maintenance.

The following information is provided, as general guidelines, if you wish to establish an inspection/maintenance program. Start with annual inspections and adjust the frequency as required to meet your needs.

Cleanliness

- Verify condensation or other sources of liquids are not present inside the OAM II.

Mechanical

- Verify signal connections are secure.
- Inspect signal lines for any cracks or leaks.
- Verify mounting hardware is secure.

Electrical

- Inspect wiring to the OAM II for good connections and absence of corrosion.

Calibration Intervals

- Air Monitor does not recommend a specific time interval between re-calibrations. Calibrations should be scheduled to meet the needs of the facility where the OAM II is installed. For example, critical care facilities may wish to schedule annual re-calibrations while commercial/retail buildings may only schedule re-calibrations at 3-5 year intervals.

SECTION 8.0 TROUBLESHOOTING

Problem	Solution
Display indicates 0 FPM while in Normal Mode	Verify fan is operational. Verify flow is above lockdown value.
Total Flow is greater than the Design Flow Max setting in the Flow Configuration dialog	The flow setting is too low for the actual flow in the duct. This can be simply fixed by increasing the DFM setting.
RTD value is fixed	Requires a calibration. This can only be done in the factory.
Temperature is very low (<-50°F)	RTD has a loose wire connection.
Flow seems high or low for given conditions	The transducer must be sized correctly for the flow in the duct, and the system must have the correct span value selected in the Transducer Configuration menu. If these conditions are correct, perform a transducer calibration. Verify air handler is operating correctly.
Flow is lower than expected or erratic	Check for pinched or crimped tubing.
Unsuspected pressure fluctuations	Disconnect sensor and transmitter and blow down tubing for potential water/condensation in the lines.

11451 Belcher Road South • Largo, FL 33773 • USA • Tel +1 (727) 447-6140
www.airmonitor.com/hvac/ • hvacsales@airmonitor.com