DPT-100

PRESSURE & AIRFLOW TRANSMITTER

We believe in our products, so should you.
1 YEAR NO FAULT WARRANTY
3 YEAR MANUFACTURER WARRANTY

The DPT-100 is a compact pressure and flow transmitter that delivers precise pressure measurement, converts it into accurate flow data, and provides a reliable analog output all within a single integrated solution. Designed for flexibility, it can be used with both differential and static pressure measurement systems, making it ideal for a wide range of HVAC applications.

FACTORY CONFIGURED

ON TIME DELIVERY

BEST CUSTOMER SERVICE

• Building Airflow Distribution Systems •
• Fan Inlet Airflow Measurement •
• Building Static Control • Room Pressurization •

DESCRIPTION

The DPT-100 Pressure & Flow Transmitter is designed to measure differential pressure and calculate airflow with high precision. It features a temperature-compensated piezoresistive measuring element that ensures excellent long-term stability. Even the smallest pressure differences are accurately detected, providing outstanding reliability and measurement accuracy. Measured values are available as analog voltage and current signals.

The DPT-100 offers freely adjustable measuring ranges and can be easily configured via integrated buttons and the display interface.

Up to two measured values can be displayed simultaneously on a 2-inch color display, ensuring clear readability from all viewing angles. Individualized labeling of measurement parameters further enhances usability.

Built for durability, the DPT-100 features a robust, weatherproof housing rated to IP65. The enclosure can be opened quickly and easily without tools thanks to its convenient snap-on cover.

APPLICATIONS

Building Airflow Measurement:

- Supply Ducted Air Flow
- Return Ducted Air Flow
- Single Fan Systems

Room Pressurization:

- Positive and Negative Space Pressurization
- Fan Discharge Plenum Pressure
- Room Pressure Average Sensing
- Large Duct Pressure

FEATURES

±4% of Flow Reading Accuracy at standard conditions when combined with Air Monitor probes versus traditional percentage of full scale.

Unmatched Price vs Performance with ±2% of DP reading accuracy with a 20:1 turn down ratio.

Easy Installation for DIN rail mounting or simple wall mounting to simplify and reduce installation costs.

Automatic Zeroing eliminates measurement drift over time, ensuring reliable and highly accurate measurements.

Highly Reliable Pressure Sensor featuring a temperature-compensated piezoresistive sensing element for enhanced long-term stability.

Compact Design - Takes minimal space and can be mounted remotely up to 100 ft to provide analog output of flow or pressure to HVAC controls.

Customer Programmable - Commissioning is easy via the back-lit display an use of push buttons. No special configuration tools needed.

CONFIGURATIONS & INSTALLATIONS

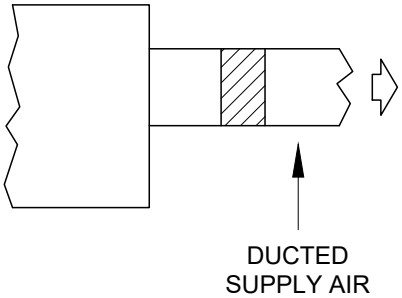

Single Airflow Measurement System
The DPT-100 is used for an individual installation location in a variety of duct configurations, primarily for supply or return airflow. Differential pressure measurement probes are paired with the DPT-100 transmitter to provide a complete airflow measurement system for each application installation.

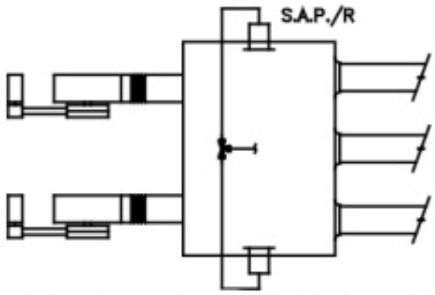

FAN DISCHARGE PLENUM PRESSURE

Plenum Pressure
The DPT-100 can be used to measure the fan discharge pressure in a plenum or duct space to measure the fan airflow.

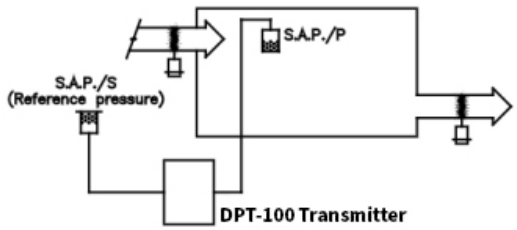

POSITIVE OR NEGATIVE SPACE PRESSURIZATION

Room/Pressurization System
The DPT-100 can be used to monitor space pressurization between two locations to ensure proper direction of airflow between spaces to manage contamination, ensure occupant safety, or maintain environmental conditions.

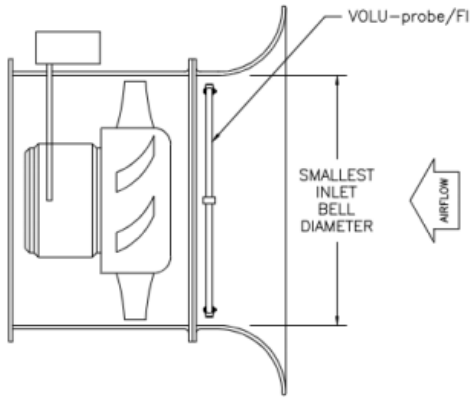

Fan Airflow
The DPT-100 can measure fan inlet pressurization and convert that to airflow to maximize cooling efficiency, improve component performance, and extend the lifespan of fans from over performance.

SPECIFICATIONS

DPT-100 TRANSMITTER		
PERFORMANCE	PRESSURE ACCURACY	±2.0% of reading at standard conditions when within a 20:1 DP turndown ratio of max pressure range selected.
OPERATING CONDITIONS	AMBIENT TEMPERATURE	-40°F to 180°F (storage) -4°F to 140°F with display -40°F to 140°F without display 14°F to 122°F for with automatic zero point setting
	PROCESS AIR TEMPERATURE	-4°F to 120°F
	HUMIDITY	5 to 95% RH, non-condensing
INPUT POWER	24 VAC	24 VAC ±10%; 50Hz/60Hz
	24 VDC	24V VDC ±10%
	POWER CONSUMPTION	1.7W at 24 VDC 2.5VA at 24 VAC
PRESSURE RANGE	MAX PRESSURE	40 in W.C. (C=A, B, D) 400 in W.C. (C=C)
DISPLAY	AVAILABLE OPTIONS	• Single DP display (C = A) • Dual Display of DP & Flow (C = B, C, or D)
I/O SIGNALS	ANALOG OUTPUTS	Single Active Analog Output, selectable based on configuration
ELECTRONICS ENCLOSURE	ENCLOSURE RATING	IP65
	DISPLAY	2.0″ diagonal color graphical TFT LCD
PROGRAMMING	VIA KEYPAD	Menu driven user interface via three (3) push buttons
ELECTRICAL CONNECTIONS	POWER	Recommend shielded 20 gauge wire
	COMMUNICATIONS	Recommend shielded 20 gauge wire
	CUSTOMER PROVIDED CABLE	Recommended cable: 20 AWG, double twisted-pair, shielded cable (4 conductors total) with an overall outer diameter of 0.23–0.51 in.
PROCESS CONNECTIONS	AVAILABLE OPTIONS	Recommend tubing length up to 100 ft with inner diameter of 0.25″ or 6 mm.
CERTIFICATIONS	CE	EMC, RED, RoHS, and WEEE directive

DIMENSIONS

Dimensions in mm [in]

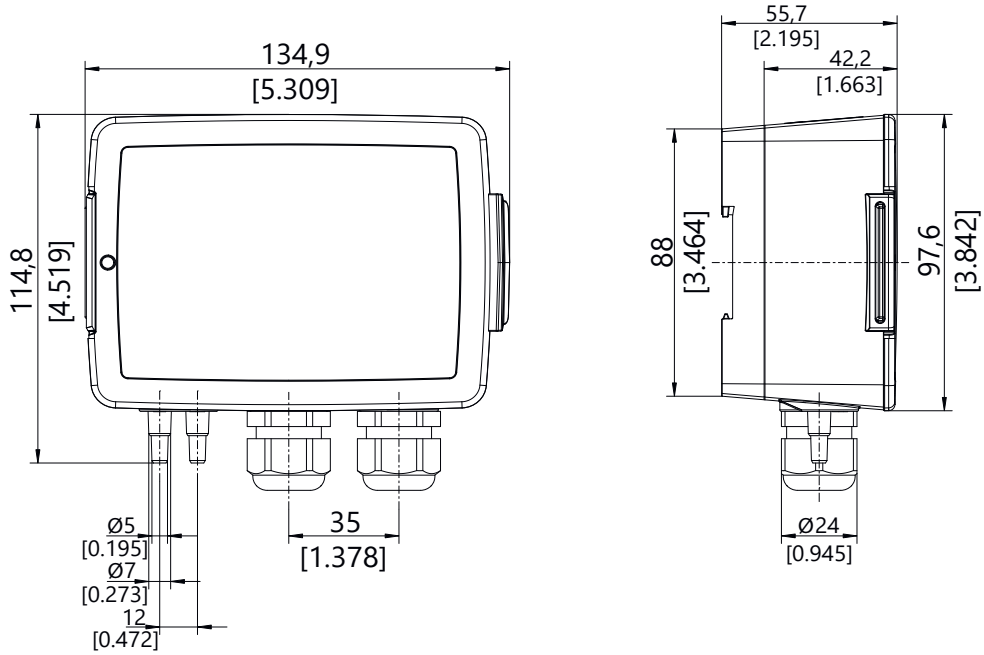

Mounting plate

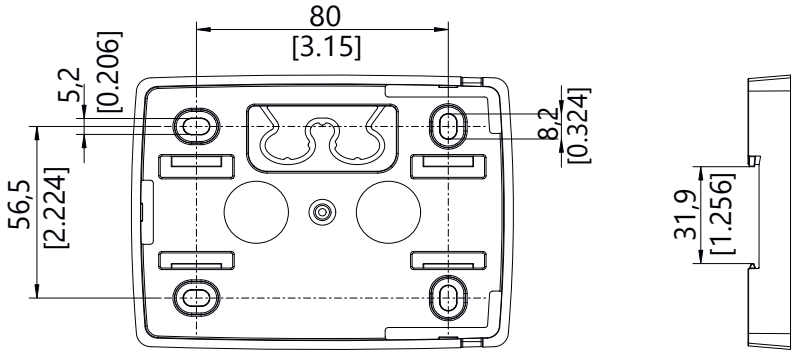

MODEL SELECTION GUIDE

DPT-1/ABC

A = Display
1 = Display

B = Auto Zero
0 = No Auto Zero
1 = Includes Auto Zero (Required on C = A, B, D)

C= Pressure Range
A = -1 to 1 inch W.C.
B = 0 to 10 inch W.C.
C = 0 to 28 inch W.C.
D = 0 to 1 inch W.C.

DPT-100 COMPATIBLE SENSORS

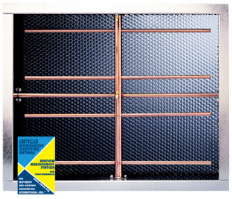	**FAN-E Airflow Measuring Station** Multi-point, self-averaging, Pitot traverse station with integral air straightner-equalizer honeycomb cell. Capable of continously measuring fan discharges or ducted airflow with an accuracy of 2% or better. AMCA CERTIFIED in accordance with Standard 610 for airflow measurement station performance.
	VOLU-probe Airflow Traverse Probes & Stations Multi-point, self-averaging, Pitot Fechheimer airflow traverse probes and stations with integral airflow direction correcting design ensures accurate measurement. Various mounting configurations to fit every application. AMCA CERTIFIED in accordance with Standard 610 for airflow measurement station performance.
	VOLU-probe/FI Fan Inlet Probes Multi-point, self-averaging, Pitot Fechheimer airflow probes with integral airflow direction correcting design. For mounting directly in the inlet cones or bellmouth of centrifugal or vane-axial fans to measure fan capacities within 3% of actual flow.
	S.A.P. Static Air Probe Available in four separate mounting configurations, the S.A.P. family of static pressure sensors generate a steady, non-pulsating output of room, space, or plenum pressure. S.A.P. sensors are available in aluminum or stainless steel construction.
	S.O.A.P. Static Outside Air Probe Designed for accurate and instantaneous sensing of outside static air pressure levels.
	STAT-probe Static Pressure Travers Probe measures static pressure in locations having limited straight duct runs with an accuracy of 3% or better.
	Aluminum LO-Flo Flow traverse station that combines honeycomb air straightner-equalizers with proven multi-point, self-averaging Pitot technology to get 2% of actual airflow readings.